Principles of Engineering

Space Technology

MISSION – 1

CAD - 2D Seed File

Exercise Objective: In this exercise you're going to create a "seed drawing" for your two dimensional (2D) drawings.

Discussion of Fundamentals: The seed drawing is a tool used in Computer Automated Design (CAD) to standardize drawings. It's sort of a startup file where all settings are configured for a desired task. The desired task for this particular seed drawing is a starting point for creating 2D drawings.

Research Resources:

Web Site	Description
2D Seed Drawing	Principles of Engineering – Space Technology, Module 2, Computer Automated Design – Resources – 2D Drawing: Animated Step-By-Step Creation of Seed File.

Required Materials:

PC Workstation
CADKEY Software

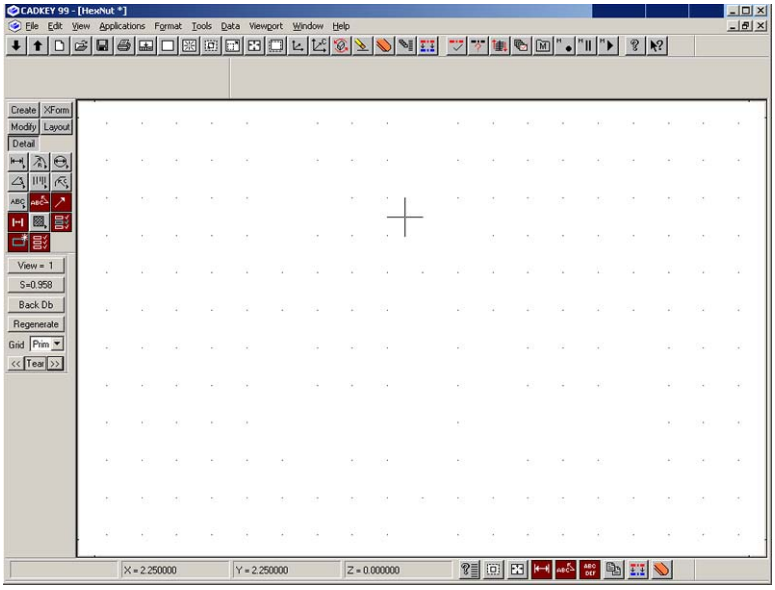

Procedure:

1. Select **File>Close** from the **MENU BAR.**
2. Select **File>New** from the **MENU BAR**.
3. Select **View=** in the **SETTINGS WINDOW**
4. Enter **1** in the text box in the **COVERSATION BAR**, then select **Accept**.
5. Click on arrow to the right of **Grid** list box in the **SETTINGS WINDOW**, and then select **Prim** (Primary Window).
6. Check the **Snap** option in the **SETTINGS WINDOW**.
7. Select View from the **MENU BAR**. Select **Cursor Tracking**, the select **World** in the **CONVERSATION BAR**.
8. Page through the **SETTINGS WINDOW** until the window with **Coords** is displayed. Click on it until it shows **WLD Coords**.
9. Select **File>Save As** from the **Menu Bar** and then enter **2Dseed** for the file name. Make sure you save your file to your home directory. When prompted, enter "**Blank 2D seed drawing"** in the **Part Description** box and then click **OK**.
10. Draw some lines and circles in the drawing space. When you're finished, select File>Close but do not save the file.

Conclusion: Every time you start a new 2D drawing, you'll open this drawing and BAM! …everything is already setup and ready for you to draw. Just make sure when you finish a drawing not to save it as 2Dseed or you'll have to create the seed drawing all over again.

Principles of Engineering

Space Technology

MISSION – 2

CAD – Hex Nut Drawing

Exercise Objective: In this exercise you're going to create a 2D drawing of a Hex Nut.

Discussion of Fundamentals: Engineers create mechanical drawings that show machinists how to fabricate parts. 2D drawings such as this one allow engineers and machinists to speak the same language. Providing their done correctly, you'll see that useful drawings can be as simple as a collection of geometric figures.

Research Resources:

Web Site	Description
Hex Nut	Principles of Engineering – Space Technology, Module 2, Computer Automated Design – Resources – 2D Drawing: Animated Step-By-Step Creation of Hex Nut.

Required Materials:

PC Workstation CADKEY Software

Procedure:

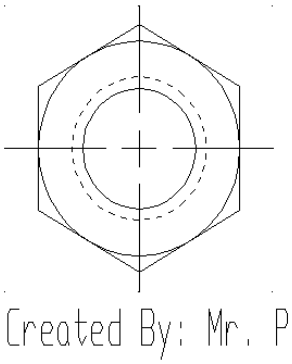

1. Open your **2Dseed** part file.
2. From the **APPLICATIONS MENU**, **Create… a polygon… by specifying a center and radius**.
3. Enter **6** as the number of sides.
4. Enter a rotation angle of **90**.
5. Enter a radius of **3/4/2**. (This is half the diameter of ¾)
6. Select **Flat** from the **CONVERSATION BAR**, select **Out-Line, Key In**, and enter X=**0**, Y=**0**, Z=**0**.
7. Autoscale the display (**Ctrl+A** or select the **Autoscale** icon from the **TOOL BAR**.
8. **Create… a circle… by specifying the center and diameter**.
9. Enter a diameter of **¾**, and Key in at X=**0**, Y=**0**, Z=**0**.
10. Select **BackUp** from the **CONVERSATION BAR**, and enter a new diameter of **0.42** and **Key in** at X=**0**, Y=**0**, Z=**0**.
11. Locate the **SETTINGS WINDOW** that shows line color and style. Click on the small arrow in the **line style box** and change it to **dashed**.
12. Select **BackUp** from the **CONVERSATION BAR** and enter a new diameter of **½**. **Key in** the destination of the center of the circle to X=**0**, Y=**0**, Z=**0**.
13. Press **Ctrl-H** or select **View>Zoom>Half** from the **Menu Bar**.
14. From the **Menu Bar**, select **View>Grid and Snap** and set both **X** and **Y** **<u>Snap</u>** **Properties Increment** to **1/16**.
15. Change the Line style back to a **solid** line.
16. **Create… a line… by indicating end points** and use the **cursor** to add the six lines show in the figure above.
17. From the **APPLICATION MENU** select **Detail>Create… a Note… by typing the text**.
18. Enter **"DRAWN BY: YOUR NAME"** in the **Text Editor** and then select **OK**.
19. From the **Menu Bar**, select **File>Save as** (Home Directory) and enter **HexNut** as the part file name.

Conclusion: One thing you should have noticed is that you can enter dimensions in both decimal and fractional form. You can also enter dimensions as mathematical expressions like 3/4/2. As you may recall, the instructions called for a radius and you only knew the diameter. Since the radius is half the diameter, the radius of ¾" is ¾ divided by 2 or 3/4/2.

Principles of Engineering

Space Technology

MISSION – 3

CAD – 2D Geometry

Exercise Objective: In this exercise you'll demonstrate your 2D drawing skills.

Discussion of Fundamentals: Now it's time to practice what you've learned so far.

Required Materials:

PC Workstation CADKEY Software

Procedure:

1. Open your **2DSeed** part file.
2. Draw the Square Nut pictured here.
   a. Do not include dimensions
   b. Center circles and square at coordinates 0,0,0.
   c. Set Snap to1/16 to create center lines.
   d. Identify your drawing with the appropriate text.
   e. Save your drawing in your home directory as **SquareNut**.
   f. Print your work.

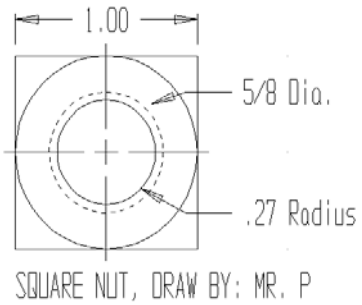

1. Open your **2Dseed** part file.
2. Draw the Step Block pictured here.
   a. Do not include dimensions.
   b. Use a 1 inch space between views.
   c. Use Create… Rectangle for top and side views.
   d. Use Create… Line… String for front view.
   e. Use Create… Line… Endpoints for internal (dashed) lines.
   f. Set snap to 1/16 to create center lines.
   g. Identify your drawing with the appropriate text.
   h. Save your drawing in your home directory as **StepBlock**.
   i. Print your work.

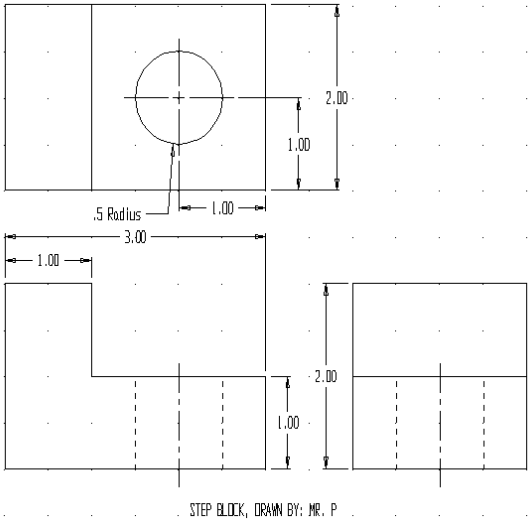

1. Open your 2Dseed part file.
2. Draw the front view of your computer display.
   a. Measure the display in inches.
   b. Include as much detail as you can.
   c. Include any buttons or switches in your design.

Conclusion: Some new commands were introduced in this exercise. The Create command in the APPLICATIONS WINDOW is used to draw a large variety of 2D geometry. 2D drawings are nothing more than a collection of 2D geometric figures. Knowing how to create and place geometry into a drawing is key to communicating with the people that are turning drawings into actual product. When you think of it… CAD is really the common language of the manufacturing industry. It's the means by which engineers explain to machinists about how to build their design.

Principles of Engineering

Space Technology

MISSION – 4

CAD – Edit the Rail Brace

Exercise Objective: In this exercise you'll learn how to efficiently draw an orthographic projection (Top, Front, Right-Side) of an object that's shown in a fully dimensioned isometric view. You'll also learn some new ways of creating lines and other useful entities.

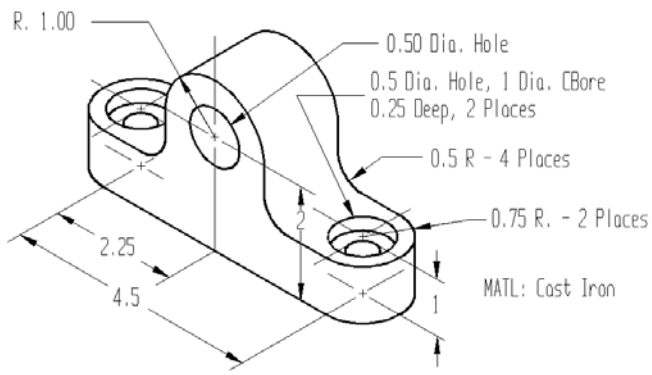

Discussion of Fundamentals: Any orthographic projection is comprised of three or more views that fully describe an object. Typically, that's the top, front, and right-side views. Sometimes, the hardest part of doing this type of work is simply visualizing what the thing looks like from the top… the front… and the right-side. It's always a good idea to start an orthographic projection by drawing the most descriptive view first. Figuring that out takes some experience, but generally… you would normally start with the front view. The next thing to look for is the largest increment you can set the grid and snap to so you can draw all entities of the object. In the drawing here… It looks like .25 or ¼ is common to all measurements. This drawing will also require some new drawing tools and methods.

Research Resources:

Web Site	Description
Rail Brace	Principles of Engineering – Space Technology, Module 2, Computer Automated Design – Resources – 2D Drawing: Animated Step-By-Step Creation of Rail Brace.

Required Materials:

PC Workstation CADKEY Software

Procedure:

1. Open your **2Dseed** part file.
2. From the **Menu Bar**, select **View>Grid and Snap** and set both **X** and **Y** **Snap Properties Increment** to **1/4**.

Top View…

3. **Create… a rectangle… segmented… Wid/Ht** with a width of **4.5** and a height of **1.5** and **Key in** at X=**0**, Y=**0**, and Z=**0**.
4. **Create… a circle… center and radius…** with a radius of **.75** and **center**ed on each vertical line.
5. **BackUp** and change the radius to **.5** and draw a circle **center**ed on each vertical line.
6. **BackUp** and change the radius to **.25** and draw a circle **center**ed on each vertical line.
7. **Delete** the two vertical lines.
8. **Create… a line… endpoints** from the **Center** of the top horizontal line to the **Center** of the bottom horizontal line.
9. **Create… a line… parallel** at a distance of **1** from the center vertical line to both the right and left of center.
10. Change the **Line Type** to **Dashed.**
11. **Create… a line… parallel** at a distance of **.5** from the center vertical line to both the right and left of center right.
12. Change the **Line Type** back to **Solid.**
13. To get rid of the parts of the circles we don't need, click on the **Modify** icon in the **APPLICATIONS WINDOW** and select **Trim Double**. To trim the largest circles… One at a time, select the part of the largest circle you want to keep and then the two horizontal lines. Your drawing should now look like the drawing here.

Front View…

In this step, we're going to position a rectangle using absolute Cartesian coordinates so it's positioned exactly below the top view with a space of 1 between the top and front views.

14. **Create… a rectangle… segmented… Wid/Ht** with a width of **6** and a height of **3** and **Key in** at X=**-.75**, Y=**- 4**, and Z=**0**.
15. Now we're going to go nuts drawing temporary lines called construction lines. You'll clean them up later. **Create… a line… parallel** at a distance of **1** using the bottom horizontal line as the reference… indicating somewhere above that line as the side.
16. **BackUp** and create another parallel line 1 up from the line you just created.
17. Borrowing some lines from the top view, click on the **Modify** icon in the **APPLICATIONS WINDOW** and select **Trim Modal**. The trimming entity is the bottom horizontal line in the front view …so select it. Now click on the three **solid** vertical lines in the top view.
18. To get rid of the connecting lines between the top and front views, click on **Modify… Trim Divide** and select the section of the vertical line that's between the top and front view (That's the **entity to trim** and that's what we want to get rid of). Then click on the bottom horizontal line of the top view and the top horizontal line of the front view (Those are the **trimming entities**). Take care of all three vertical lines this way.

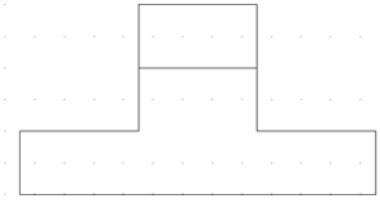

19. Use **Modify… Trim First, Trim Divide, and Delete** to edit your design so it looks like drawing on the right.
20. **Delete** the center vertical line in the top view.
21. **Create… a circle… center and radius…** with a radius of **1** and **center**ed on the middle horizontal line in the front view.
22. **BackUp** and change the radius to **.5** and draw another circle **center**ed on the same line.
23. Use **Modify… Trim First, Trim Double, and Delete** to edit your design so it looks like drawing on the right.

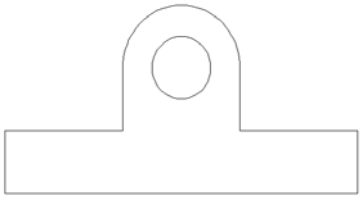

24. Let's add the fillets (pronounced: fill-its) to the front view. **Create… a fillet… with trim** with the radius set to .5. Select the two intersecting lines from the problem drawing that make up the fillet entities.
25. Change the Line Type to hidden lines (dashed).
26. Using **Snap**, draw in the hidden lines that represent the counter bored holes. They must line up with the top view drawing. Your front view should look like the drawing on the right.

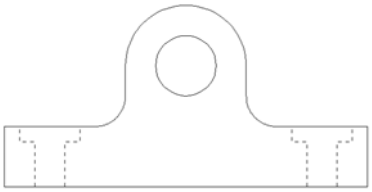

Right Side…

27. **Create… a line… parallel** using the right vertical line from the front view as the reference line with a distance of **1**. This will make the left vertical line of the right side view.
28. **BackUp** and create another parallel line **1.5** to the right of the line you just created.
29. **Create… a line… endpoints** from the **End of Entity** between the bottoms of the two vertical lines you've just created. Do the same with the tops of the two vertical lines so you have a small box for the right side view.
30. **Create… a line… parallel** using the top horizontal line in the right-side view to create a line a distance of **2** above this line.
31. Use **Modify… Trim First** to extend the two vertical lines to the top horizontal line in the right side view.

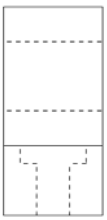

32. Using **Snap**, draw in the hidden lines that represent the counter bored and thru holes. They must line up with the front view drawing. The right side view should look like the drawing to the right.
33. From the **Menu Bar**, select **File>Save as** (Home Directory) and enter **RailBrace** as the part file name.

Conclusion: This was no simple task. Orthographic drawings are important because they are used by technicians and machinists to create a product. Drawing errors waste time and materials as the technicians try to figure out what you're saying in your drawings. That's why orthographic drawings place the top, front, and right side views in a specific layout. It's a standard way of communicating between the engineers and the shop floor. Hidden lines (dashed) represent holes where solid lines represent outside edges. The top view is placed directly above the front view. The right-side view is placed immediately to the right of the front… all observing a space between views.

Principles of Engineering

Space Technology

MISSION – 5

CAD – Dimensions and Border

Exercise Objective: In this exercise you'll add dimension details and a border to an existing drawing.

Discussion of Fundamentals:

Details, such as dimensions and notes provide the measurements and data a technician or machinist needs to actually build a product. The border not only makes the drawing look more professional, the title block in the border contains important information about the drawing and who designed it. To allow easier manipulation of the drawing, dimensions, and border these objects will be placed in different layers or levels. Levels can be activated and turned on or off to allow flexible editing on any part of the design desired.

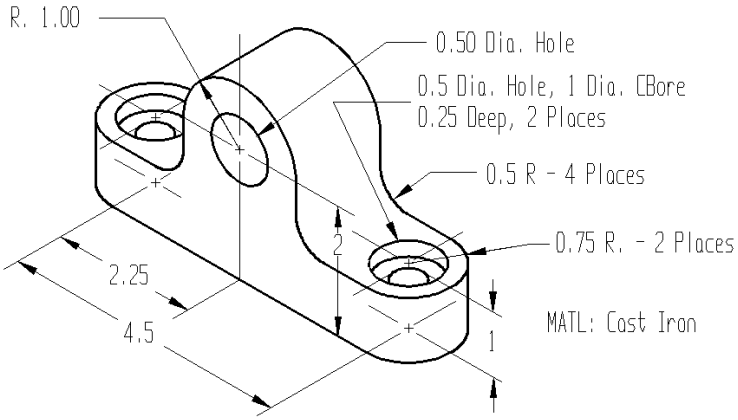

Research Resources:

Web Site	Description
Dimensioned Rail Brace	Principles of Engineering – Space Technology, Module 2, Computer Automated Design – Resources – 2D Drawing: Animated Step-By-Step Dimension of Rail Brace with Border.

Required Materials:

PC Workstation CADKEY Software

Procedure:

1. Open your **Rail Brace** part file and autoscale the drawing.
2. Draw all center lines for the holes.
3. From the **MENU BAR** select **View… Levels… List…** This is a list of all the levels. Notice all entities are currently on level 1. That's where you drawing of the Rail Brace resides.
4. Change the Descriptor information for Level 1 to Rail Brace.
5. Change the Descriptor information for Level 2 to Dimensions
6. Change the Descriptor information for Level 3 to Notes
7. Change the Descriptor information for Level 4 to Border
8. Click on Level 2 - Active so we can add dimensions to only that level and select OK.

Dimensioning… *The goal to dimensioning an orthographic drawing is to completely describe the part without duplicating any dimensions. It's not a simple task. Use the isometric drawing above to gather your dimensions.*

9. From the **APPLICATIONS MENU**, **Detail… Dimension Settings…**
10. Under the Text tab, in the Dimensions section, check Auto Center to automatically center dimensions.
11. Under the Dimension tab, change the Round Off precision to 2 decimal places (n.nn) and click OK.
12. From the **APPLICATIONS MENU**, **Detail… Linear Dimension… Horizontal Dimension** and **End of Entity**.
13. Put in all horizontal dimensions shown in the drawing below.
14. From the **APPLICATIONS MENU**, **Detail… Linear Dimension… Vertical Dimension** and **End of Entity**.
15. Put in all vertical dimensions shown in the drawing below.
16. From the **APPLICATIONS MENU**, **Detail… Radial Dimension… Center and Edge**.
17. Put in all radial dimensions shown in the drawing below.
18. From the **APPLICATIONS MENU**, **Detail… Diameter Dimension… Edges**.

Frank C. Pendzich © 11 January 2006

19. Put in all diameter dimensions shown in the drawing below.
20. From the **APPLICATIONS MENU**, **Detail… Label… 1** arrowhead and enter the Text **"1 Counter Bore Hole .25 Deep"** as shown in the drawing below.
21. Put in all radial dimensions shown in the drawing below.
22. Press Ctrl-Shift-R to regenerate the screen and remove all the cursor marks.
23. Change the **Active Level** to **Level 3 – Notes**.
24. From the **APPLICATIONS MENU**, **Detail… Notes…** and add **"Material: Aluminum"** as shown in the drawing below.

Border…

25. Change the **Active Level** to **Level 4 – Border**.
26. **Create… Rectangle… Segmented… Wid/Ht**… with the Width set to **10** and the Height set to **7.5**. Key in the lower left corner of the rectangle to X = **-1.5**, Y = **-5.5**, Z = **0**.
27. **Create… Line… Parallel… 3/8** up from the bottom horizontal line of the border.
28. Use **Snap** to draw the vertical lines in the title block of the border as shown in the drawing below.
29. Insert the Notes for Date, Name, Drawing Title, and Class.
30. From the **Menu Bar**, select **File>Save as** (home directory) and enter **RailBrace** as the part file name.

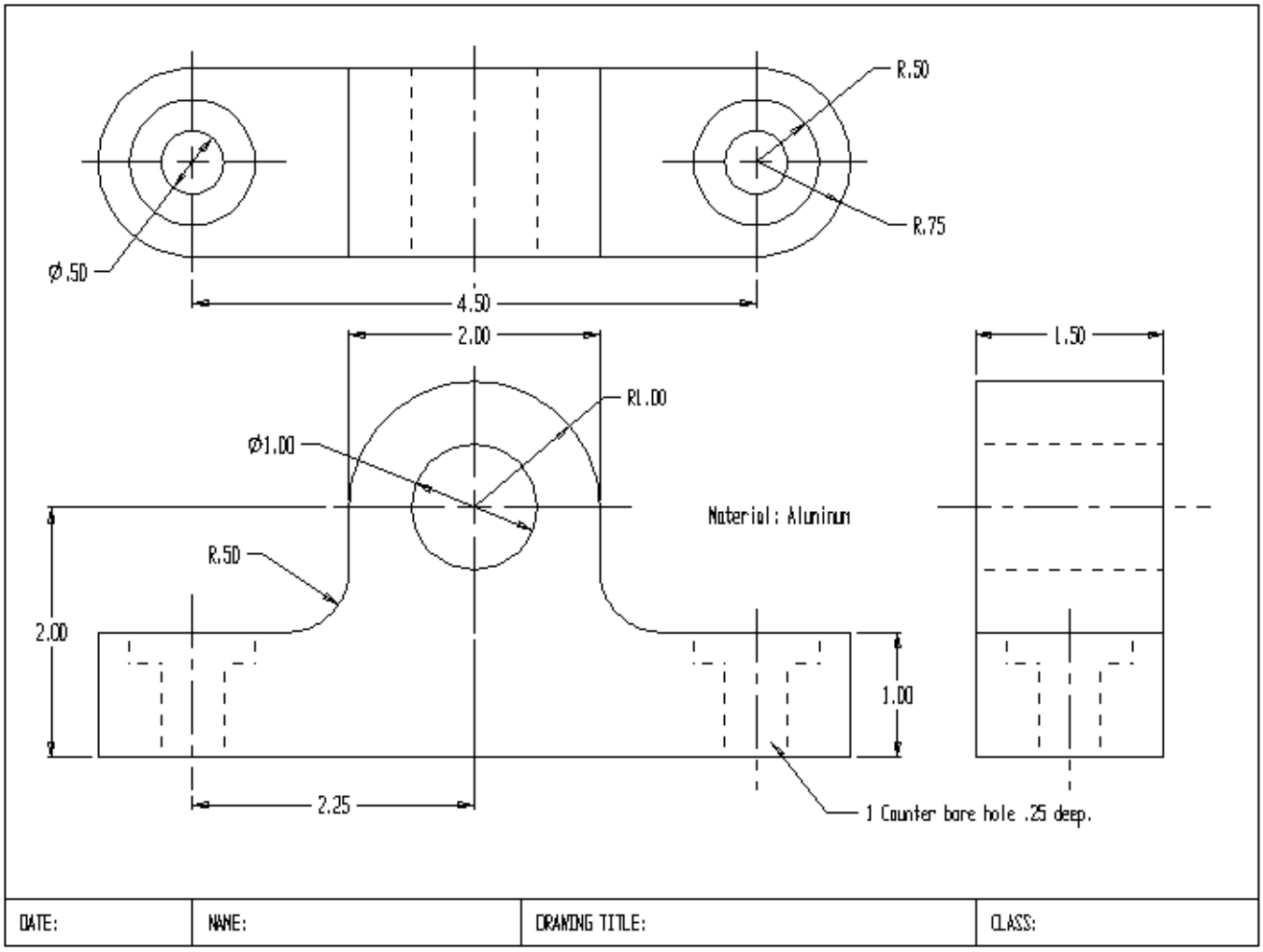

Conclusion: The result from your work in this exercise is a complete orthographic drawing of a Rail Brace. Armed with this drawing, any skilled machinist or technician can cut, mill, and drill a chunk of aluminum into this shape. During this process you learned how to add details, such as dimensions and notes to a drawing. You also learned how to place elements of a drawing into different levels. Finally, you learned how to place your drawing into a border and properly identify it.

Frank C. Pendzich © 11 January 2006

Principles of Engineering

Space Technology

MISSION – 6

CAD – 2D Detail Drawing

Exercise Objective: In this exercise you'll demonstrate your 2D detail drawing skills.

Discussion of Fundamentals: Now it's time to practice what you've learned so far. This bracket is made from ½" aluminum stock and is comprised of two parts that will be welded together.

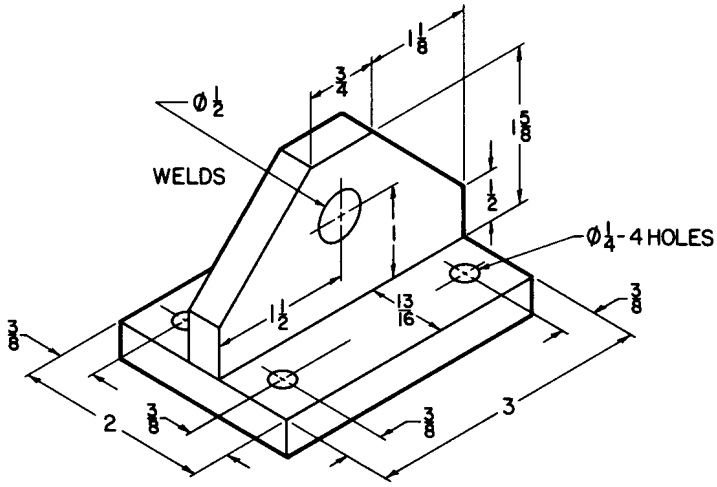

Required Materials:

PC Workstation CADKEY Software

Procedure:

1. Open your **2DSeed** part file.
2. Create Levels for Drawing, Dimensions, Notes, and Border.
3. Draw a 3-View orthographic projection of this fully dimensioned object shown in isometric view.
   a. Set the Snap to 1/8
   b. Start by drawing the front view
   c. All holes are thru holes
   d. Draw centerlines for holes in all views. Centerlines go on the Drawing level.
   e. All hidden lines are dashed
   f. The Drawing, Dimensions, Notes, and Border must be on separate levels
   g. Include all dimensions necessary to describe the object
   h. Do not repeat dimensions
   i. Place your drawing in a 10 x 7.5 border with title block
   j. Identify your drawing with the appropriate text in the title block.
   k. Save your drawing in your home directory as **TBracket**.
   l. Print your work.

Conclusion: You've just increased you CAD skill base by 1000% Completing this drawing (even with a little help) is a significant achievement. You've learned to perceive a three-dimensional perspective of an object and covert it into an orthographic projection. You've also demonstrated that you can add the necessary details to a drawing that allow it to be fabricated. Perhaps the most useful skill you've developed is the ability to edit a drawing through trimming and extending lines, circles, and arcs. All of this and in a neat border as well… Outstanding!

Frank C. Pendzich © 11 January 2006

Principles of Engineering

Space Technology

MISSION – 7

CAD – 3D Seed File

Exercise Objective: In this exercise you're going to create a "seed drawing" for your three dimensional (3D) drawings.

Discussion of Fundamentals: The seed drawing is a tool used in Computer Automated Design (CAD) to standardize drawings. It's sort of a startup file where all settings are configured for a desired task. The desired task for this particular seed drawing is a starting point for creating 3D drawings.

Research Resources:

Web Site	Description
3D Seed Drawing	Principles of Engineering – Space Technology, Module 2, Computer Automated Design – Resources – 3D Drawing: Animated Step-By-Step Creation of 3D Seed File.

Required Materials:

PC Workstation CADKEY Software

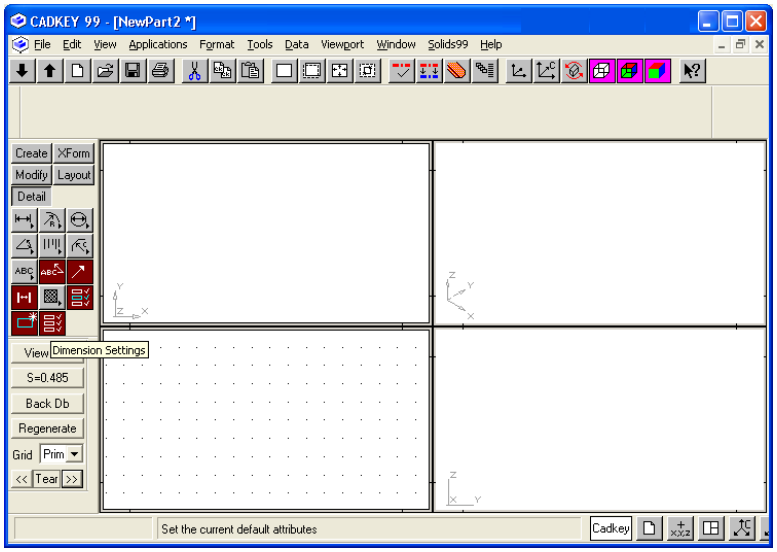

Procedure:

1. **Open** the **2DSeed** drawing.
2. From the **MENU BAR**, select **Viewport>Layout** and then the **four viewport** option.
3. When prompted to indicate the **primary** view, click on the **lower left** view port.
4. In the **SETTINGS WINDOW**, change the **Grid** option to **Prim**.
5. Set the **View/World Coordinates** to **WLD Coords** in the **SETTINGS WINDOW**.
6. Set **Snap** to **On** in the **SETTINGS WINDOW**.
7. Select View from the **MENU BAR**. Select **Cursor Tracking**, the select **World** in the **CONVERSATION BAR**.
8. Cycle through the **SETTINGS WINDOW** until **View=** is displayed. Move the cursor from viewport to viewport noticing how the view and cursor tracking changes.
9. From the **MENU BAR**, select **View>Levels>List**. Edit the **descriptors** so **Level 1** is **Geometry**, **Level 2** is **Dimensions**, and **Level 3** is **Border**.
10. Turn on the **Display** of **Levels 1**, **2**, and **3** making **Level 1** the **Active** level and then click on **OK**.
11. Using the **APPLICATIONS MENU**, select **Detail>Set the current default attributes**.
12. Set the **Notes** and **Dimension Char Height** to **.200** and set the **Anchor** points to the **center**.
13. Set the **Dimension** to **Autocenter**.
14. Set the **Leader/Witness Arrow Style** to **Filled Arw**, and set the **Tolerance** to **None**.
15. From the **MENU BAR**, select **File**, **Save** as and save the file to your home directory as **3DSeed**.

Conclusion: Every time you start a new 3D drawing, you'll open this drawing and BAM! …everything is already setup and ready for you to draw. Just make sure when you finish a drawing not to save it as 3DSeed or you'll have to create this seed drawing all over again.

Principles of Engineering

Space Technology

MISSION – 8

CAD – 3D Wire Frame

Exercise Objective: In this exercise you'll learn how to create a 3D wire frame object from 2D geometry. You'll also learn some new ways of creating lines and other useful entities.

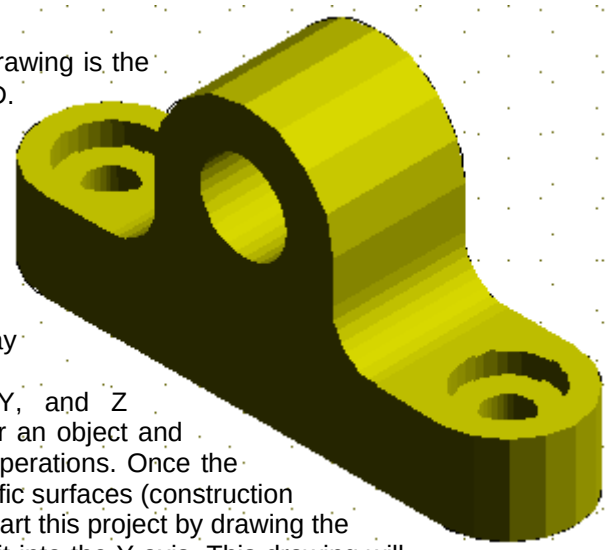

Discussion of Fundamentals: 3D wire frame drawing is the first generation of true three dimensional drawing using CAD. To this point, your drawings have been 2D drawings using the X and Y coordinates. Points of a 3D wire frame drawing reside in the X, Y, and Z axis. In World Coordinate 3D drawing, the X axis is a horizontal line, and the Z axis vertical, and the Y axis is an imaginary vector drawn between the CAD operator, perpendicular to the computers display, to the display screen and beyond. +Y is from the origin to the operator and –Y is from the point of origin away from the operator.

Although you can draw 3D geometry using only X, Y, and Z coordinates… It's much easier to create the 2D geometry for an object and then transform it into the 3rd dimension using various CAD operations. Once the basic 3D geometry is complete, then it's time to work on specific surfaces (construction planes) to add specialized components such as holes. We'll start this project by drawing the object's most descriptive view as a 2D view and then XForm it into the Y axis. This drawing will also require some new drawing tools and methods so be ready to learn some new CAD techniques.

Research Resources:

Web Site	Description
Rail Brace 3D Wire Frame	Principles of Engineering – Space Technology, Module 2, Computer Automated Design – Resources – 2D Drawing: Animated Step-By-Step Creation of Rail Brace.

Required Materials:

PC Workstation CADKEY Software

Procedure:

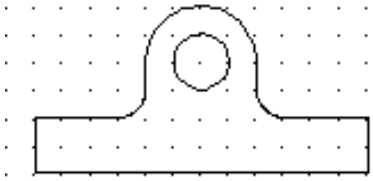

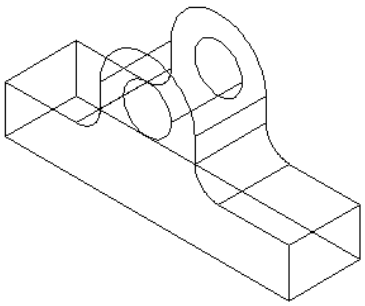

1. Open your **3Dseed** part file.
2. From the **Menu Bar**, select **View>Grid and Snap** and set both **X** and **Y** **Snap Properties Increment** to **1/4**.
3. Cycle through the **WINDOWS SETTINGS** panels until the **CPlane** option is shown. Click on **CPlane** and from the options shown in the **CONVERSATION BAR**, select **CP=DV** or construction plane equals the displayed view.
4. Use the multi-view drawing from Exercise 5, draw the front view of the object in the **lower left** viewport. Start by drawing a 6 x 3 **segmented rectangle key**ed **in** at **X=0**, **Y=0**, and **Z=0**. It's important that the cursor remains in **viewport 2** (lower left viewport) when the coordinates are keyed in. Use the skills you've learned to complete the front view. Do not include the hidden lines. Your drawing should look like this.
5. From the **APPLICATIONS MENU** select **XForm>Delta>Join>All Dsp** in the **lower left viewport**. Select All entities making **1** copy to **X=0, Y=1.5, Z=0.** Make sure the cursor stays in the lower left viewport. Your drawing should now look like this.

Frank C. Pendzich © 11 January 2006

6. From the **MENU BAR** select **Viewports>Layout** and single.
7. From the **APPLICATIONS MENU** change the **View=7** and **Autoscale** if necessary.
8. Now its time to work on the two holes at the ends of the Rail Brace. To do this, change the construction plane to the surface that the circles will be drawn on. Click on the **CPlane** option in the **SETTINGS WINDOW**. Select **2 Lines** from the **CONVERSATION BAR** and then click on two intersecting lines from the top of the Rail Brace. Anything you draw will be drawn on this surface.

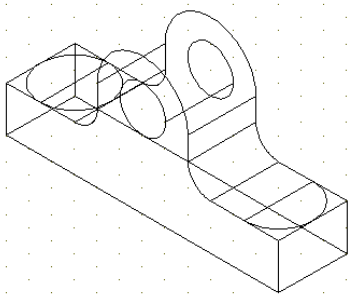

9. Create 2 construction lines parallel at a distance of .75 from the ends of the Rail Brace.
10. Create 2 circles with a .75 radius at the center of the lines you just created.
11. Trim one of the circles into an arc as shown here.
12. Project the arc to the bottom of the Rail Brace using **XForm>Project Normal>Joined** and select the arc. When prompted for the destination plane, select **2 Lines** and then click on any two intersecting lines on the bottom of the Rail Brace.
13. Select **Modify>Trim First** and the **Erase** tools to cleanup the end of the Rail Brace.
14. Next… Let's work on the counter bore holes. Create a circle with a diameter of 1 at the center of the top arc or at the center of the line created in step 9.
15. Use **XForm>Delta>Joined** to transform the circle you just created down into the block .25 (**X=0, Y=0,** and **Z=-25**).
16. To finish off this end of the Rail Brace, change the construction plane to the bottom circle of the hole you just created. Click on **CPlane** in the **SETTINGS WINDOW** and then **Entity**. Click on the circle at the bottom of the hole. Anything drawn will now be drawn on this surface and depth.
17. Create a .5 diameter circle at the center of the circle at the bottom of the hole.
18. Project the circle you just created to the bottom of the Rail Brace using **XForm>Project Normal>Joined**.
19. Erase the construction line at the center of the hole. You're drawing should now look like this.

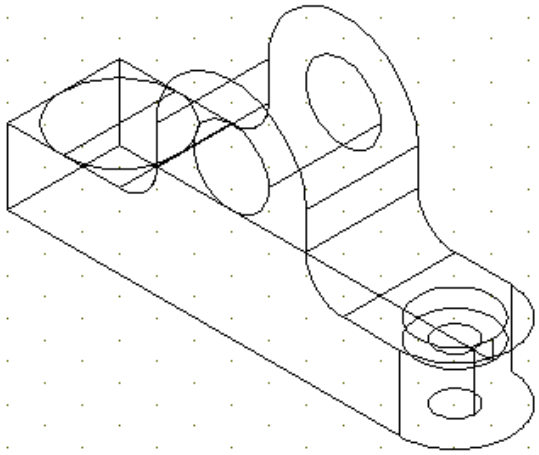

20. Repeat the procedure from Step 11 to complete the other end of the Rail Brace. When you're finished, your completed wire frame drawing should look like this.
21. To prove this is a true 3D representation of the Rail Brace, select **Rotate Part** from the **TOOL BAR** and then select **Center** to **Indicate the rotation center**. Select one of the large circles in the drawing and then click and drag the cursor to freely rotate the part around different axis.
22. In the **SETTINGS WINDOWS**, set the **View=7** and **Autoscale** to get the drawing back in an isometric view.
23. Change the construction plane to 7 and draw a 10 x 7.5 border with title block around the object.
24. Complete the title block information to include Date, Name, Drawing Title, and Course Name.
25. To render the object so you can view it as a solid, select **Picture** from the **Applications** option in the **MENU BAR**. Select from the different **Render** option to see how each one works.

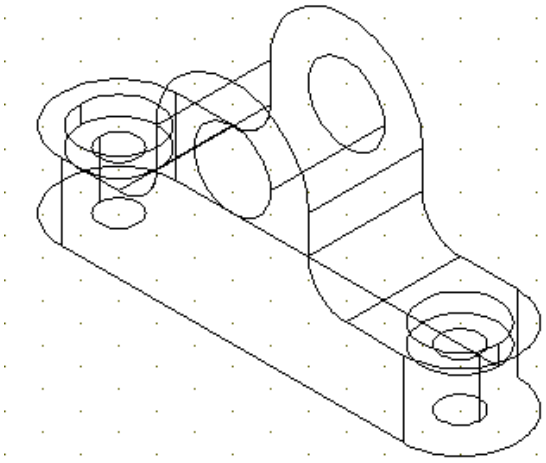

26. Print the completed drawing.
27. From the **MENU BAR**, select **File**, **Save as** and save the file to your home directory as **3DRailBrace**.

Conclusion: Isn't 3D cool? This type of drawing is a type of CAD model technique. It's not really something you would give to a technician and machinist because it lacks the details necessary to fabricate it. However, this type of drawing is excellent for visualizing what the completed part is going to look like. It's a true, three dimensional representation of an object that can be viewed from any perspective. Once the design is complete, it can be copied into a multiview drawing and dimensioned.

Frank C. Pendzich © 11 January 2006

Principles of Engineering

Space Technology

MISSION – 9

CAD – 3D Wire Frame Drawing

Exercise Objective: In this exercise you'll demonstrate how to create a 3D wire frame drawing from and fully dimensioned multi-view drawing.

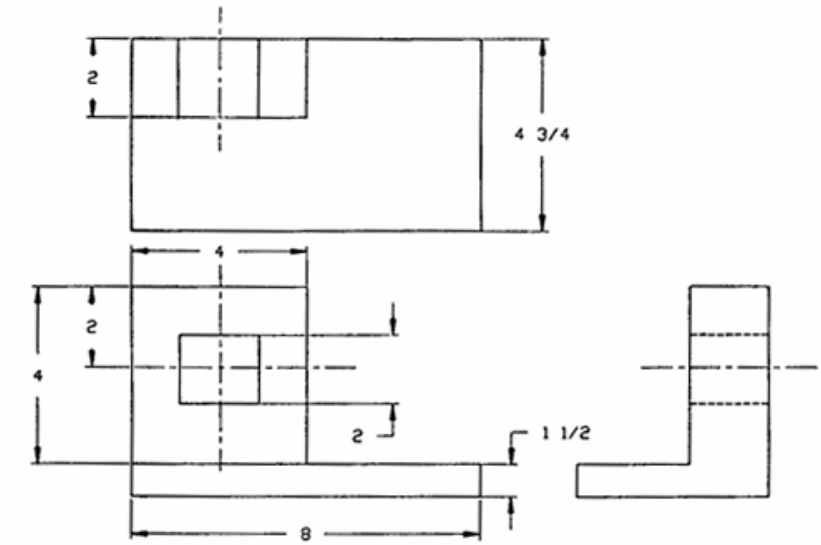

Discussion of Fundamentals: The tough part is visualizing what the object will look like based upon the front, top, and right side views. Once you've got an idea, pick the best view to start your drawing from. Picking the correct view is the key to the successful modeling of any object.

Required Materials:

PC Workstation CADKEY Software

Procedure:

1. Open your **3DSeed** part file.
2. Draw a 3D wire frame model from the multi-view drawing.
    a. Set the Snap to 1/4
    b. Start by drawing the right side view
    c. Edit away the unwanted lines
    d. Project the square hole
    e. Place an isometric view of your drawing in a 18 ¾ x 13 (Size B) border with title block
    f. The object is placed in the Geometry Level and the Border on the Border Level.
    g. Identify your drawing with the appropriate text in the title block.
    h. Save your drawing in your home directory as **LBracket**.
    i. Print your work.

Conclusion: This was a tough task, but if you completed it with little or no help you're on your way towards real engineering. In this series of exercises, you've moved from the 2D world into the 3rd dimension. Wire frame drawing is very useful when designing any object. Although the information isn't very useful to a machinist, to an engineer the 3D wire frame drawing makes it possible to visualize an end product. Wire frame drawings can easily be converted into multi-view drawing. However, Computer Automated Manufacturing (CAM) can use wire frame drawings to program tool coordinates for milling or lathing component parts automatically. Although useful, wire frame drawings are old technology… Next we enter the engineering world of solid modeling.

Frank C. Pendzich © 11 January 2006

Principles of Engineering

Space Technology

MISSION – 10

CAD – Solid Blocks

Exercise Objective: In this exercise you'll demonstrate solid drawing techniques with blocks. You'll also use Boolean CAD functions to Union and Subtract drawing components to create a single solid object.

Discussion of Fundamentals: Drawing using solids is an efficient way to create designs. Solids drawing techniques are a lot like sculpting. The engineer starts with basic 3D geometric objects called primitives and then adds or subtracts other primitives to create the design. This exercise works with blocks and some basic Boolean operations like Union and Difference. This drawing will exercise your Absolute Coordinate drawing skills. You'll notice each primitive is placed in the design using only X, Y, and Z coordinates.

Research Resources:

Web Site	Description
Solids Block Drawing	Principles of Engineering – Space Technology, Module 2, Computer Automated Design – Resources – 3D Drawing: Animated Step-By-Step Creation Solid Blocks.

Required Materials:

PC Workstation CADKEY Software

Procedure:

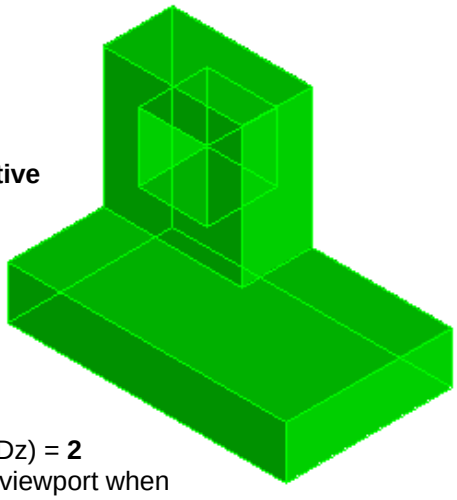

1. **Open** the **3DSeed** drawing.
2. From the **MENU BAR**, select **Applications>Solids99**.
3. From the **APPLICATIONS MENU**, select **Create>Create Primitive** and select the **Block**.
4. To **Create a Block**, enter Width (Dx) = **8**, Length (Dy)= **4+3/4**, Height (Dz) = **-1.5**. Create by **Key in** and select **OK**.
5. Key in the coordinates at X=**0**, Y=**-4.75**, Z=**0**. Make sure the cursor is in the **Top** viewport.
6. **Create** another **Block**, Width (Dx) = **4**, Length (Dy)= **2**, Height (Dz) = **4** Keyed in at X=**0**, Y=**-2**, Z=**0**. Make sure the cursor is in the **Top** viewport when you do this.
7. **Create** another **Block**, Width (Dx) = **2**, Length (Dy)= **2**, Height (Dz) = **2** Keyed in at X=**1**, Y=**-2**, Z=**1**. Make sure the cursor is in the **Top** viewport when you do this.
8. Work in the isometric view. **Union** the two largest blocks by selecting **Modify** from the **APPLICATIONS MENU** and then clicking on **Boolean Ops**.
9. Select **Boolean Union** and then click on the two largest blocks and then click on **Esc**. The two block are now one solid object.
10. Click on **Boolean Ops** and select **Boolean Difference**. To subtract the small block from the new large block, click on the large block as the object to subtract from, click on the small block to subtract it.
11. To view the object as a solid, select **Render With Wireframe** from the **TOOL BAR** and select the isometric viewport.
12. Rotate the part in the isometric viewport. Notice the drawing that was once 3 blocks is now a single object.
13. Print the isometric view of this drawing.
14. Save the part in your home directory as **SolidBlock.prt**.

Conclusion: You might recognize this drawing from the previous section. Using the wireframe drawing technique, it takes around 25 steps to create this drawing. Using solids… it's half the work. Solid objects can still be represented in multiview drawings with dimensions, but more often, the coordinates are downloaded to machines that can mill the part from raw materials …otherwise know as Computer Automated Manufacturing (CAM).

Frank C. Pendzich © 11 January 2006

Principles of Engineering

Space Technology

MISSION – 11

CAD – Solid Cylinders

Exercise Objective: In this exercise you'll demonstrate solid drawing techniques with cylinders. Along with basic Boolean operations, you'll also use some advanced display functions to rotate and place textures on the surfaces of an object.

Discussion of Fundamentals: Cylinders in solids drawing are either objects or holes. Subtracting cylinders from an object is an easy way to create a hole or a tube. This exercise works with cylinders and some basic Boolean operations like Union and Difference. This drawing will exercise your Relative Coordinate drawing skills. You'll notice each cylinder is drawn using reference locations on existing lines and arcs.

Research Resources:

Web Site	Description
Solids Cylinder Drawing	Principles of Engineering – Space Technology, Module 2, Computer Automated Design – Resources – 3D Drawing: Animated Step-By-Step Creation Solid Cylinders.

Required Materials:

PC Workstation CADKEY Software

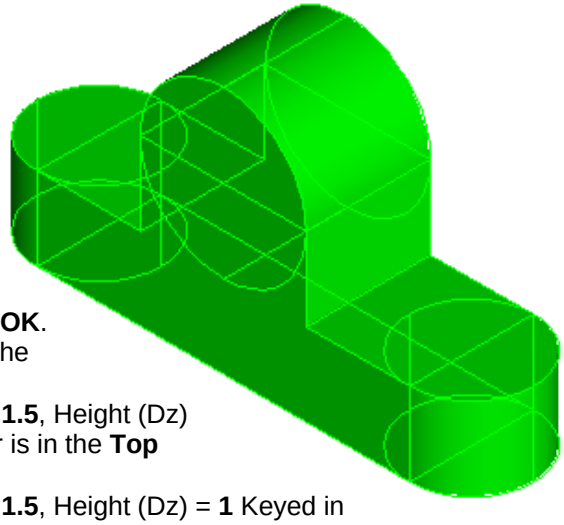

Procedure:

1. **Open** the **3DSeed** drawing.
2. From the **MENU BAR**, select **Applications>Solids99**.
3. From the **APPLICATIONS MENU**, select **Create>Create Primitive** and select the **block**.
4. To **Create** the **block**, enter Width (Dx) =**4.5**, Length (Dy)= **1.5**, Height (Dz) = **2**. Create by **Key in** and select **OK**.
5. Key in the coordinates at X=**0**, Y=**-.75**, Z=**0**. Make sure the cursor is in the **Top** viewport.
6. **Create** another **Block**, Width (Dx) = **1.25**, Length (Dy)= **1.5**, Height (Dz) = **1** Keyed in at X=**0**, Y= **-.75**, Z=**1**. Make sure the cursor is in the **Top** viewport when you do this.
7. **Create** another **Block**, Width (Dx) = **1.25**, Length (Dy)= **1.5**, Height (Dz) = **1** Keyed in at X=**3.25**, Y= **-.75**, Z=**1**. Make sure the cursor is in the **Top** viewport when you do this.
8. While working in the isometric view…
9. Use **Boolean Difference** to subtract the two small blocks from the large block.
10. **Create Cylinders** using **2 points** with a **Major Radius** of **.75**. Place the cylinders using the **Center** of **Two Lines** as shown in this drawing.
11. **Modify>Blend Edges** and set the **Radius** to **.25** and then select the lines that are filleted.
12. **Boolean Union** the three cylinders to the block.
13. **Create Cylinders** using **2 points** with a **Major Radius** of **.25**. Place the cylinders using the **Center** of the **Arcs** that make up the small cylinders.
14. **Create Cylinders** using **2 points** with a **Major Radius** of **.5**. Place the cylinders using the **Center** of the **Arcs** that make up the large cylinder.
15. **Boolean Difference** the three cylinders from the block.
16. **Create Cylinders** using **Key in** with a **Major Radius** of **.5** and a **Height** of **-.25**. In the **Top** view, place the cylinders using the **Center** of the **Arcs** that make up the small circles.
17. In the isometric view Boolean **Difference** the two cylinders from the block.
18. All drawing components are now one solid object.
19. To view the object as a solid, select **Render With Wireframe** from the **TOOL BAR** and select the object in the isometric viewport.

Frank C. Pendzich © 11 January 2006

20. From the **MENU BAR** select **Solids99>Spin Rendered Image** and click the object. Press Esc to return to the isometric view.
21. From the **MENU BAR** select **Solids99>Display>Change Face Texture** and **Apply Textures** to **Entire Bodies**. **Browse Textures** and select the **Chrome_s3** in the **Textures** folder and then click on the object.
22. Put the object in isometric view and print it out.
23. Save the part in your home directory as **SolidRailBrace.prt**.

Conclusion: In this drawing, you created a large block and then subtracted two smaller blocks to make the body of the object. You then added some cylinders to extend the body and then subtracted cylinders to make holes and counter bores. So… Now do you realize how much easier it is to work in solids than wireframe or 2D?

Principles of Engineering

Space Technology

MISSION – 12

CAD – Cones and Pyramids

Exercise Objective: In this exercise you'll add solid drawing techniques with cones and pyramids to what you have already learned. You'll also continue to practice using Boolean operations as you design a solid rocket for a Launch Escape System (LES).

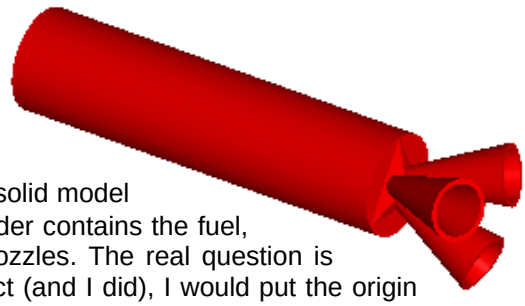

Discussion of Fundamentals: Take a close look at the solid model of the LES. It's comprised of three basic geometric objects. The cylinder contains the fuel, the cones are the nozzles, and the pyramid is at the base of the nozzles. The real question is where to start drawing... Where is 0, 0, 0? If I were to draw this object (and I did), I would put the origin dead center of the base of the pyramid and then draw all components using absolute coordinates from there.

Research Resources:

Web Site	Description
Solids Cones and Pyramids Drawing	Principles of Engineering – Space Technology, Module 2, Computer Automated Design – Resources – 3D Drawing: Animated Step-By-Step Creation Solid Cones & Pyramids.

Required Materials:

PC Workstation CADKEY Software

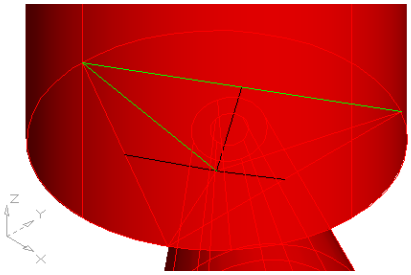

Procedure:

1. **Open** the **3DSeed** drawing.
2. From the **MENU BAR**, select **Applications>Solids99**.
3. From the **APPLICATIONS MENU**, select **Create>Create Primitive** and select the **cylinder**.
4. **Create** a **cylinder** and enter **Radius** = **5**, **Height** = **40**, and **Key In** at X=**0**, Y=**0**, Z=**0**.
5. **Create** a **pyramid** and enter a **Lower Major Radius** = **5**, **Upper radius** = **0**, **Height** = **-1**, **Number of Sides** = **3** and **Key In** at X=**0**, Y=**0**, Z=**0**.
6. From the **MENU BAR**, select **Applications>Cadkey** and draw three lines from the point of the pyramid to the center of each base side. (Shown in **black** here)

Note: *You will now create a cone with its base on one of the faces of the pyramid. To do this, you'll need to change the construction plane to the pyramid face you want to work on. The best way to do this is by using the **CPlane** command using **2Lines**. The two **green** lines make up one face of the pyramid.*

7. From the **MENU BAR**, select **Applications>Solids99**.
8. Change the **CPlane** using **2Lines** and select the two green lines shown above.
9. From the **APPLICATIONS MENU**, select **Create>Create Primitive** and select the **cone**.
10. **Create** a **cone** and enter a **Lower Major Radius** = **1**, **Upper Radius** = **3**, **Height** = **-10** and **Key In** at the center of the line (**black**) drawn on that face.
11. **Create** a **cone** and enter a **Lower Major Radius** = **.5**, **Upper Radius** = **2.5**, **Height** = **-10** and use **Two Points.** Select the center of circles at each end of the cone**.**
12. Use **Boolean>Difference** to subtract the small cone from the large cone.
13. Change the construction plane to the next face on the pyramid and repeat the process until all three nozzles are in place.
14. Autoscale the drawing and print it. Save the part in your home directory as **MercuryLES.prt**.

Conclusion: The LES you drew in this exercise is a complex drawing. Using solids makes it much easier.

Frank C. Pendzich © 11 January 2006

Principles of Engineering

Space Technology

MISSION – 13

CAD – Spheres and Toruses

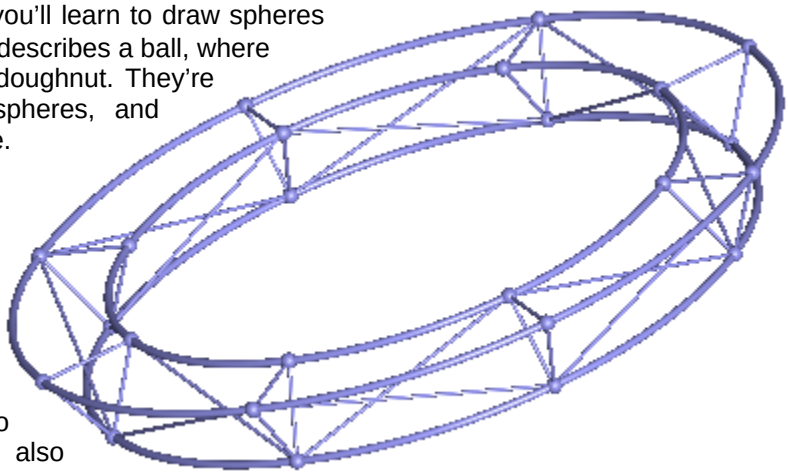

Exercise Objective:

In this exercise you'll learn to draw spheres and toruses. Sphere is the geometric term that describes a ball, where as a torus is more like a hoop or perhaps a doughnut. They're both types of solids. You'll use toruses, spheres, and cylinders to create the circular truss shown here.

Discussion of Fundamentals:

Trusses are structures that are strong for their weight. This is an important consideration when launching stuff into space. The more a payload weighs, the more fuel it takes to get it into orbit. Since the amount fuel is limited, engineers focus on making the spacecraft and it's payload as light as possible. Not only do they try to use the lightest materials, they also design things to be strong and durable. Trusses are designed to evenly distribute load, force, or torque throughout the entire structure. The key to the truss is the common triangle. Take a close look at this truss. How many triangles do you see? Believe it or not, there're 56 triangles in this structure… and it's very strong. The technique we're going to use to draw this object is complicated. We'll start with the triangles, add the spheres, and then the three toruses.

Research Resources:

Web Site	Description
Solids Spheres and Toruses	Principles of Engineering – Space Technology, Module 2, Computer Automated Design – Resources – 3D Drawing: Animated Step-By-Step Creation Spheres and Toruses.

Required Materials:

PC Workstation CADKEY Software

Procedure:

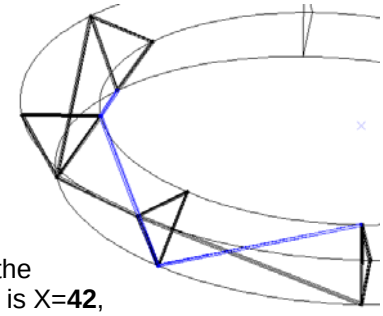

1. **Open** the **3DSeed** drawing.
2. From the **MENU BAR**, select **Applications>Cadkey**.
3. In the front viewport, **Create>Polygon** by specifying the center and the length of the side. The number of sides is **3**, rotation angle is **180**, and the length of the polygon side is **12**. Key in the location of the triangle to X=**0**, Y=**0**, and Z=**0**.
4. From the **APPLICATIONS MENU** select **XForm>Rotate** and **Join** selected entities using angular rotation using **Arcs**. Select the triangle in the front viewport and **Accept**. Make **8** copies and use **Key in** to create the axis. The first point is X=**42**, Y=**0**, and Z=**0**. The second point on the axis is X=**42**, Y=**0**, and Z=**12**. The rotation angle is **45** degrees.
5. From the **MENU BAR**, select **Applications>Solids99**.
6. You'll need lots of drawing room so change the layout to a single viewport in View 7.
7. **Create** a **Primitive Cylinder** between **Two Points** with a **Major Radius** of **.25**.
8. Select **EndEnt** and draw cylinders between the endpoints of the triangles as shown. Rotate the object as necessary to complete the addition of all the cylinders. Inside diagonal braces stay on the inside. The outside braces stay to the outside. The peaks of the triangles oppose one another.
9. **Key in 2** inch diameter **spheres** to the corners of each triangle using **EndEnt** as shown below.

Frank C. Pendzich © 11 January 2006

10. Set the Construction Plane to 1.
11. **Create** a **Primitive Torus** with a **Major Radius** of **48** and a **Minor Radius** of **.5** at the **Center** of the largest circle.
12. **Create** a **Primitive Torus** with a **Major Radius** of **36** and a **Minor Radius** of **.5** at the **Center** of the smallest circle.
13. **Create** a **Primitive Torus** with a **Major Radius** of **42** and a **Minor Radius** of **.5** at the **Center** of the bottom circle.
14. Render the drawing without a wireframe and closely examine your work. The completed drawing should look like this close-up view or the complete view shown at the beginning of this exercise.
15. Autoscale the drawing and print it. Save the part in your home directory as **CircleTruss.prt.**

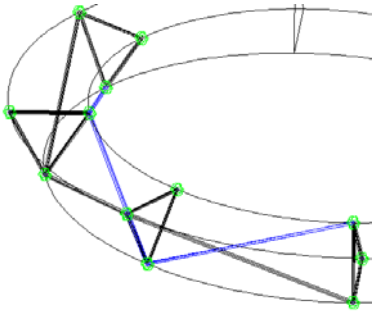

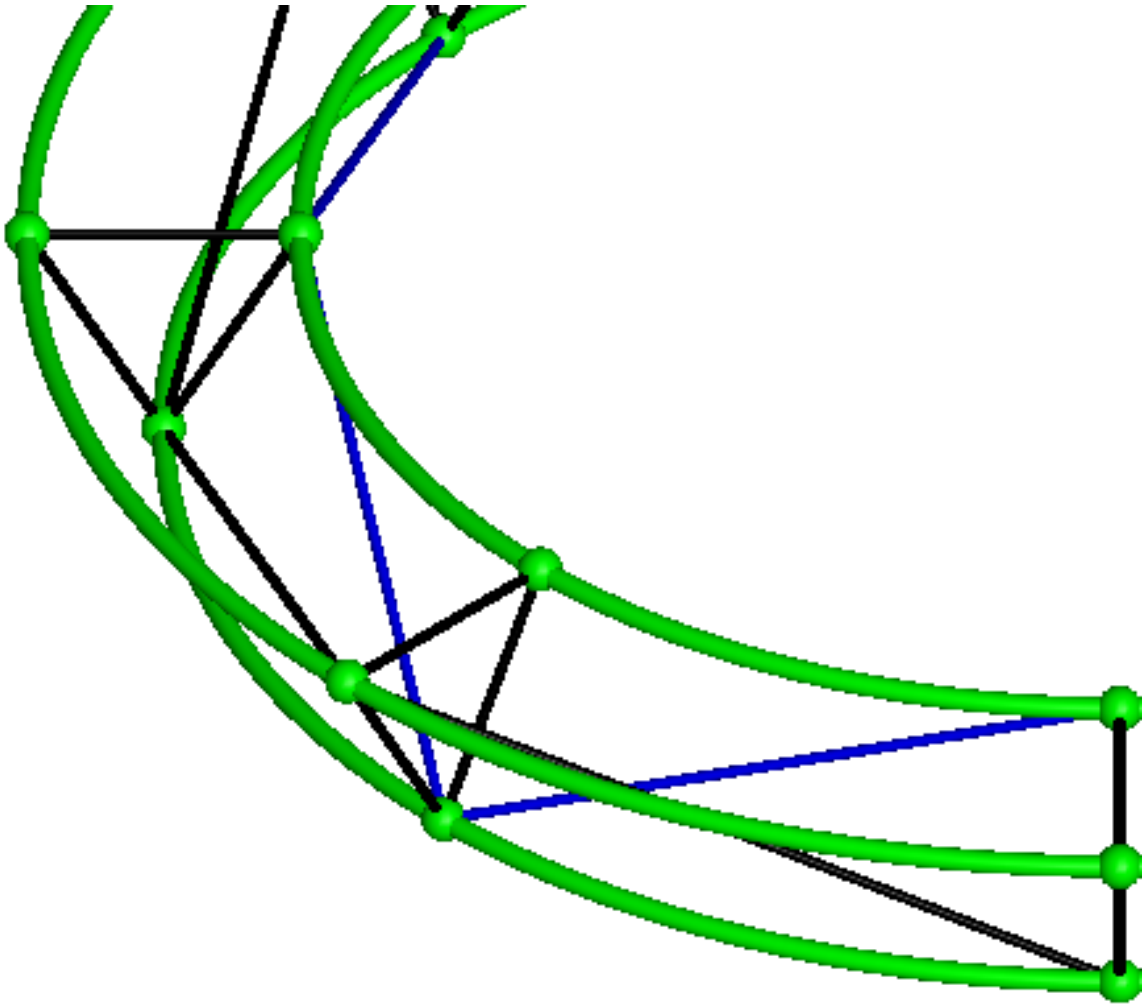

Conclusion:

Are you getting the hang of this? You should have developed an understanding of how this drawing tool works. Each entity or object you've drawn follows about the same process. You're learning the process so you can apply what you've learned to other drawing challenges.

Spheres and toruses are common components found in spacecraft and space structure design. Knowing how to create and place these objects will make your design work accurate, and productive.

Principles of Engineering

Space Technology

MISSION – 14

CAD – Editing Solids

Exercise Objective: In this exercise you'll practice some common editing techniques for solid objects. You'll also learn some new ways of creating solid structures from 2D Geometry.

Discussion of Fundamentals: Perhaps you're starting to realize how similar solid modeling is to working with real-world objects. Cutting, joining, drilling are the same types of things you might do to a wooden frame or aluminum block. In this exercise, you'll construct a solid model of a hydroponics system using PVC pipe. You'll start by defining the limits of your drawing and then use 2D geometry to layout your design. Finally, you'll draw pipe and then drill holes in it.

Research Resources:

Web Site	Description
Editing Solids	Principles of Engineering – Space Technology, Module 2, Computer Automated Design – Resources – 3D Drawing: Animated Step-By-Step Editing Solids.

Required Materials:

PC Workstation CADKEY Software

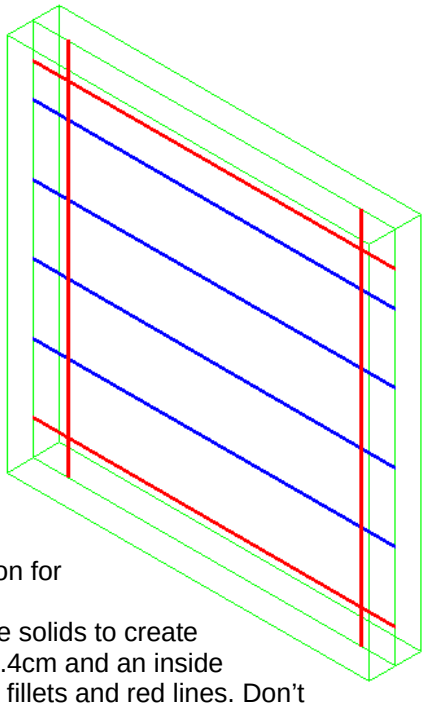

Procedure:

1. Bring in the 3DSeed file and setup the level descriptions for Level 1 = Limits and a level 2 = Structure.
2. The physical limits of the hydroponics bay is 210cm wide, 220cm high, and 30cm deep. Create a line rectangle with these dimensions and then XForm it with a join to get a 3D wireframe representing the limits of the hydroponics bay (Shown in **Green**).
3. In this model, the PVC tubing is positioned in the center of the limits so the tubing fits within the perimeter of the hydroponics bay. The **red** lines are 20cm away from the edges of the bay.
4. The **blue** lines are 40cm drawn parallel to the bottom **red** line.
5. Edit the blue and red lines to represent the serpentine shape of the PVC tubing as shown.

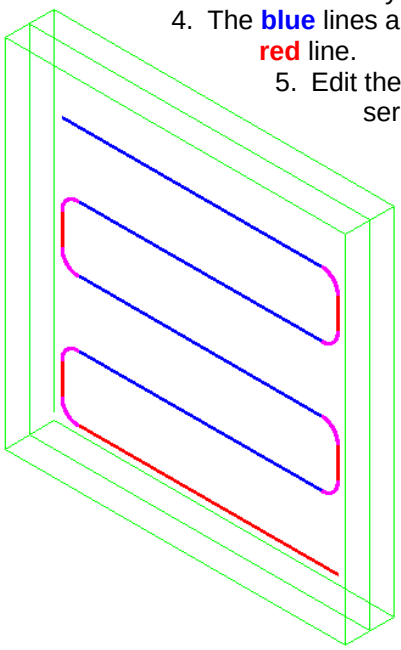

6. Create 10cm fillets at each intersection for the PVC elbow fittings.
7. Change to the Structure level and use solids to create a pipe with an outside diameter of 10.4cm and an inside diameter of 10cm and select only the fillets and red lines. Don't do the blue lines.
8. Zoom in on the bottom tube and create 6 points on the top line of the tube. You may have to rotate the drawing to see the top line clearly.
9. Back into Solids mode, modify the bottom tube by drilling a 7.5cm holes through the tube up to the next face at the five points centered on the tube.
10. Go ahead and delete all the points you just created.
11. Use Xform>Old/New to copy the bottom tube to the top blue line.
12. Repeat the steps to complete the remaining tubes.
13. Save your work, turn off the limits level and print out your model.

Conclusion:

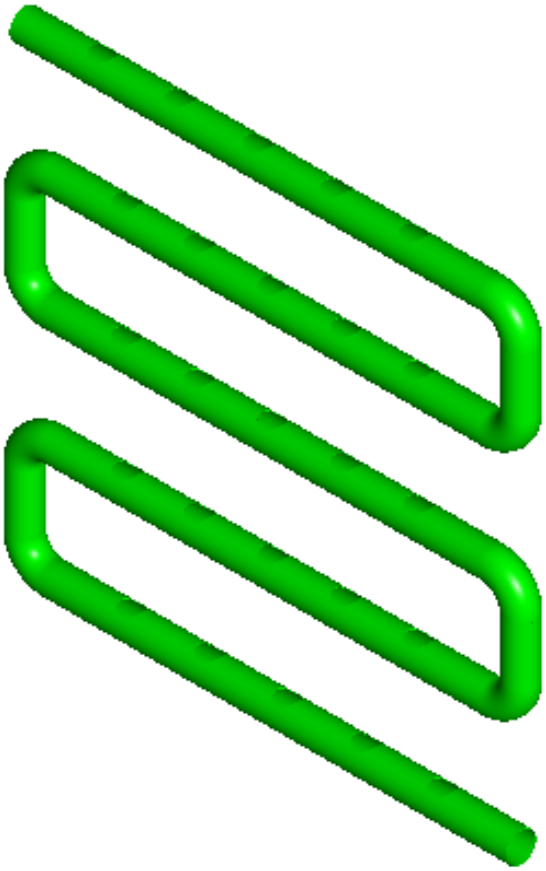

If you were able to create the drawing to the right…That's pretty cool. You should have noticed that you're not getting specific step-by-step instructions anymore. That's important because you're learning how to create objects based upon what you've learned about CAD. Soon, you'll use CAD to develop ideas that you come up with on your own.

In this exercise, you used a variety of editing techniques to create a 3D model of a hydroponics system. Creating and drilling pipes are CAD tools you'll use quite often in this class. In fact, you'll repeat this process as you design and build an actual hydroponics system based upon your detailed design work.

Until then… Let's move on to your last mission.

Principles of Engineering

Space Technology

MISSION – 15

CAD – Solids Modeling

Exercise Objective: It's time to muster all the skills you've acquired to this point and apply them to this final CAD mission. This exercise incorporates a lot of familiar drawing techniques and adds a couple of advanced tricks to your CAD toolbox. In this final exercise, your mission is to create a solid model of the Russian Soyuz spacecraft.

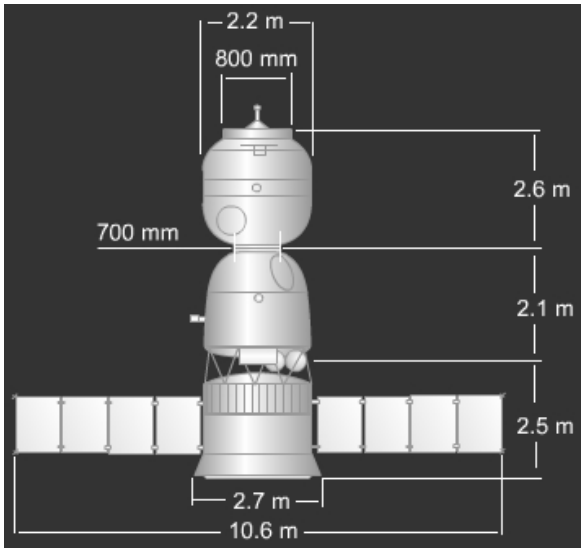

Discussion of Fundamentals: Take a close look at these diagrams. If you could break this spacecraft into a collection of geometric shapes… What would they be? Perhaps you see cylinders …or spheres …or cones …maybe a torus and certainly a 3D block or two. There's also symmetry to consider here. It's easy to see bilateral symmetry in the dimensioned drawing above, but when you examine the rendered image of the spacecraft you should notice that radial symmetry is really the key component to how draw this thing. Knowing about symmetry can save tons of drawing time. Instead of building the Soyuz with Boolean solids, we'll use advanced drawing techniques as we rotate and sweep a shell to create the spacecraft body.

Research Resources:

Web Site	Description
Solids Modeling	Principles of Engineering – Space Technology, Module 2, Computer Automated Design – Resources – 3D Drawing: Animated Step-By-Step Editing Solids.
http://www.russianspaceweb.com/soyuz.html	Website focused upon the Russian Soyuz spacecraft. This site used as the resource for the graphic images in this mission. Contains detailed information and specification about Soyuz.

Required Materials:

PC Workstation CADKEY Software

Procedure:

1. Open your 3Dseed file and setup the screen display for four viewports making the front viewport the primary view. Set up a level for Grid, Geometry, and Border. Set the Snap to X=5 and Y=5.
2. Make sure you're on the Grid level. In the front viewport, create a rectangle measuring 785cm x 110cm positioned at X=0, Y=0, and Z=0.
3. Start creating a grid to create the radial profile of the spacecraft. The left side of the grid will be the Transfer Hatch and the right side of the grid will be the tail of the Service Module.

Frank C. Pendzich © 11 January 2006

4. From the left side of the rectangle, use create lines parallel to create a construction grid using the dimensions shown in the diagram.

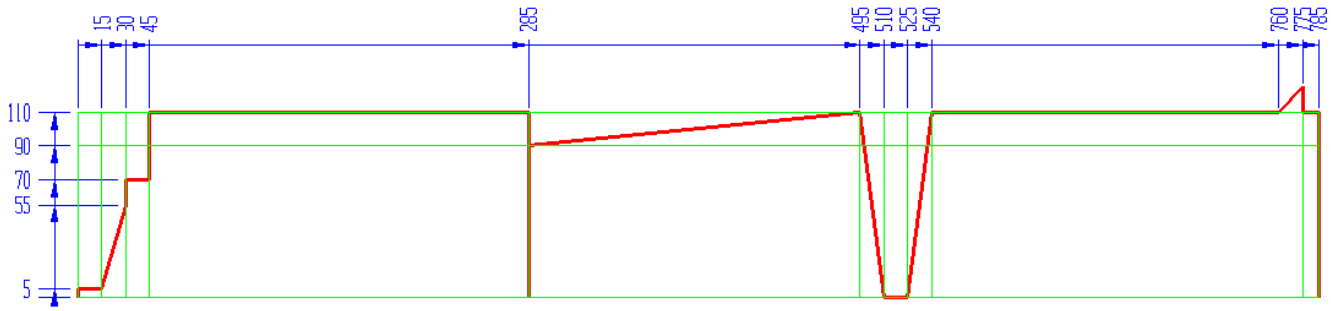

5. In the Geometry level, and using a red line color, create a line string representing the radial profile of the spacecraft as shown above. Make sure snap is on.

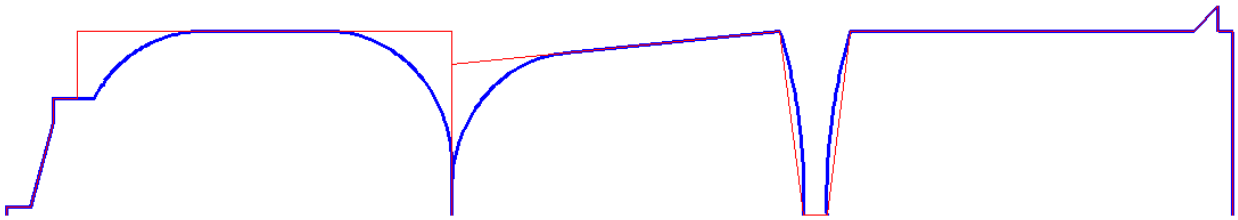

6. Turn the Grid level off and change the line color to blue. Use the editing tools to create the radial profile of the Soyuz spacecraft. The size of the fillets is 80 and the arcs between the Reentry Capsule and Service module are drawn as 3-Point arcs on the perimeter. Estimate the size of the arc to get a nice shape for the heat shields.
7. Now it's time to rotate the radial profile into a solid object. Use Solids to sweep the closed planar profile about an axis to create a solid. Meaning… Select Solids99>Create>Extrude,Revolve,Sweep,Loft Solids>Revolve. Set the Revolve Angle to 360 and single select the 9 line elements that makeup the Orbital Module. For the axis, use EndEnt to select the bottom ends of any two vertical lines. When you're finished, you should have a solid model of the major components of the Soyuz.

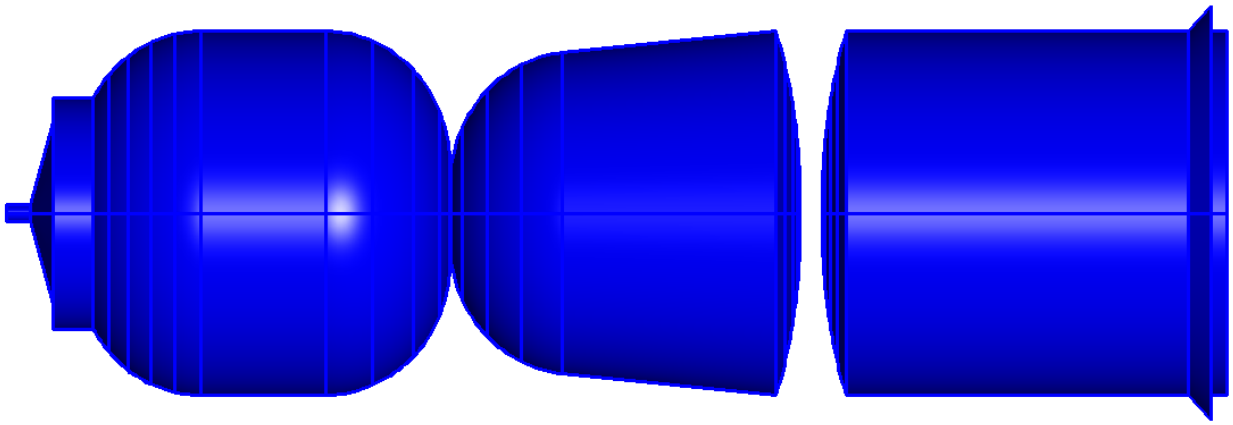

8. Let's create the truss between the Re-entry Capsule and Service Module. Change the View to 7 and Autoscale the drawing.
9. Change the line color to yellow. Using the CADKey application, create 10 points on the edge of the Service Module heat shield. When asked to Group the Entities, answer yes and name the group "Normal". Do the same for the edge of the heat shield on the Re-Entry Capsule. Name this group of points, "Rotate".
10. Xform>Rotate>Move>Group>ByName Rotate. Indicate the first point on the axis of rotation as the Center of the edge of the Service Module heat shield and the second point as the Center of the edge of the Re-Entry Capsule heat shield. Enter the Rotation Angle as the mathematical expression 360/10/2. Redraw the screen to see the changes. Now the points are offset correctly.

11. Create a Cylinder with Radius of 2 from point-to-point between the Service Module and Re-Entry Capsule as shown here. You may have to rotate the object to complete the truss all away around the spacecraft.
12. Solar Panels – Make sure the Construction Plane is set to 1 and Create a Block Dx = 150 Dy = 530 Dz = 5 and position it at X=600, Y=0, and Z=0
13. Use Xform>Rotate>Copy to make a copy of the solar panel at a 180 degree angle.
14. Create a sphere with the radius of 10 at the center of the Access Hatch rod.
15. Add the Oxygen and Hydrogen spheres to the truss space between the Re-Entry Capsule and Service Module.
16. Change the colors of the model to a suitable representation of the actual Soyuz spacecraft.
17. When you're finished, save your drawing and print out a copy for review. You are now ready to be tested.

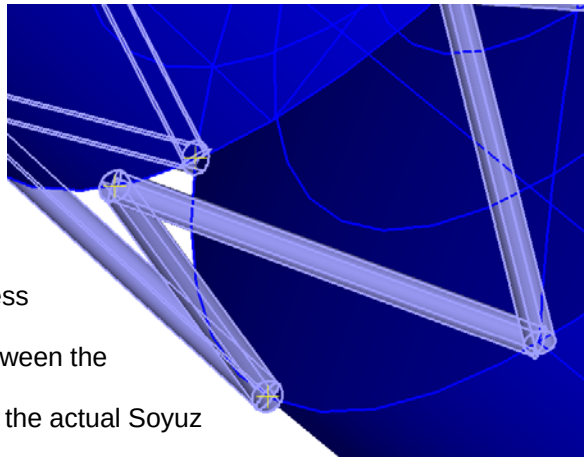

Conclusion: Your completed drawing should look something like this. In this mission you've learned yet another way to work with solids. In this case, you created a solid from 2D geometry by rotating the geometry about an axis. This mission could have also been completed using 3D geometry such as spheres, cylinders, and blocks but the method introduced in this mission is much more efficient. That's really the point behind showing you different ways of drawing things. The idea is that you'll know when to apply a specific method when it's necessary to save time or make more accurate drawings.
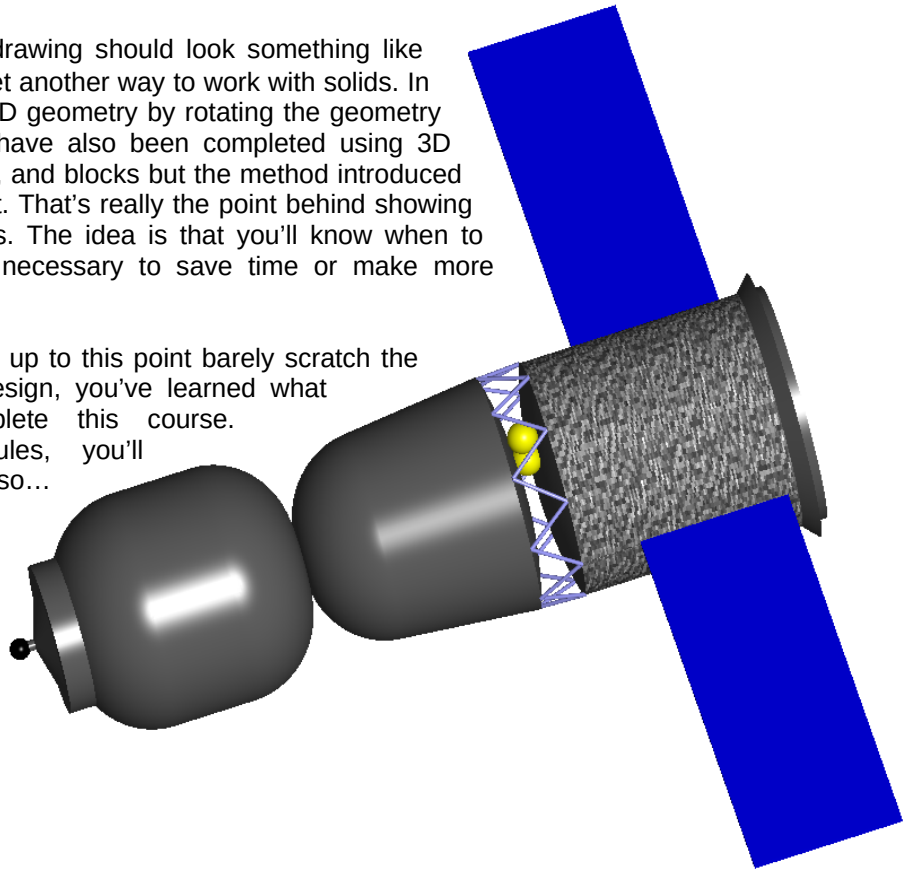
Although the skills you've developed up to this point barely scratch the surface of Computer Automated Design, you've learned what you need to successfully complete this course. Throughout the remaining modules, you'll exercise what you've learned here so… Don't forget how to use this important tool. CAD is truly the language engineers use to communicate.