Electronics Formulas

Technical Manual

A Guide to Commonly Used Conversion Factors,
Formulas, Tables, and Color Codes

Introduction

By now, it must be pretty clear that Computer Service and Support is a highly technical career. Since computers and printers are electronic devices, this field requires some knowledge and skills in the electronics field. The study of electronics is as fundamental to computer repair as spelling is to writing.

I know from experience that there are as many computer technicians in the job market lacking electronics training as there are writers that don't know how to spell. These techs seem to get along pretty well without knowing much about electronics so… Why should you study electronics?

The point I'm trying to make is this… To be a good computer service technician you'll need to know how computer systems work. The basic building blocks of computers are the electronic systems and logic circuits they're comprised of. You'll need to know more than how to operate or program computers. To be great at this job, you'll need to know more than how to remove and replace parts. You'll also need to know the basics of how electronic systems work. Our study of electronics will start with electronic theory and the application of some pretty specialized formulas.

Words and Terms You Should Learn

Voltage	Ohm's Law	Reciprocal
Current	Georg Ohm	Voltage Drop
Resistance	Gustav Kirchhoff	Load
Power	Subscript	Engineering Notation

Basic Electronic Formulas

Ohm's Law – Shows that there is a specific and calculable relationship between the voltage, current, resistance, and power in a dc circuit. It states that the voltage (E) across any element in dc circuit is equal to the current passing through the element in amperes, multiplied by the element's resistance in ohms.

Mathematically expressed by: $E = I \bullet R$

Using algebraic transposition, the formulas for Current (I) and Resistance (R) are: $I = E/R$ and $R = E/I$

Another relation used in Ohm's Law is Power (P). The basic formula for calculating Power is: $P = I \bullet E$

Again… Using algebraic transposition, the formulas for Current and Voltage are: $I = P/E$ and $E = P/I$

Example: Let's say you have a 60 Watt light bulb in your desk lamp and you wanted to know how much current it was using. If you live in the United States, the voltage used in your home is most likely 120 Volts. Since you're looking for Current you would apply Ohm's Law $I = P/E$ or $I = 60/120$.

The lamp would use .5 Amps of current.

It might be difficult for you to remember the different versions of these two formulas. Until you do, you can use the formula wheel in Figure 1. Simply place your fingertip over the value you're searching for at the center of the wheel. The formulas you can use are revealed in that particular quadrant of the wheel.

Voltage Measured in Volts, voltage is the electrical pressure that moves electrons through a conductor or circuit. It's cause be a difference in potential between the amount of electrons on the negative terminal of a power source and the positive terminal. Batteries and electrical wall outlets deliver voltage.

Current Current is measured in Amperes or Amps (milliamperes and microamperes too). Current is the actual movement of electrons through a conductor. It's similar to the water moving through a garden hose where the garden hose acts as the conductor.

Resistance Resistance is a property of all conductors. Some conductors have high resistance and others have low resistance. Resistance is the opposition to current flow. The amount of resistance depends on the material, its dimensions, and its temperature. As an example… You can change the amount of water spraying out the end of a garden hose (current) by crimping the hose (resistance). Crimping the hose changes the dimension of the conductor.

Power Measured in Watts, it's the amount of energy dissipated by an electrical device. Light bulbs, sound systems, and microwave ovens all indicate their power in watts.

Kirchhoff's Laws – His 1st law states that the current flowing to a given point in a circuit is equal to the current flowing away from that point. The 2nd law states that the algebraic sum of the voltage drops in any closed circuit is equal to the applied voltage. Gustav built his work upon that of Georg Ohm, experimentation, and observation of water systems. In fact, the easiest way to describe Kirchhoff's law is to compare it to a river or stream.

Have you ever seen an island in the middle of a river? The river has to split into two channels so it can get around the island. After the water passes the island it recombines into a single channel. You have to assume that the amount of water flowing in the river (that would be current) before the island is the same as when it recombines after the island. If you add the current flowing in the two channels as it passes the island together, that would have to equal the current of the river. Now… Let's compare this to a couple of circuits:

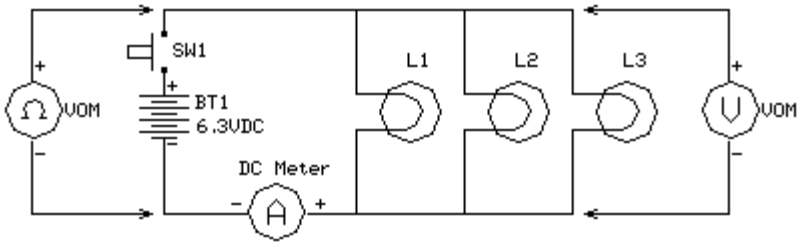

Parallel Lamp Circuit – When switch SW1 is closed, current is allowed to flow from the negative terminal of the battery BT1 through the lamps (L1, L2, and L3) through the switch to the positive terminal of the battery. The Voltmeter (V) will show that each lamp will have 6.3vdc of electrical pressure on them because each are connected directly to the power source. The Ammeter (A) measures the amount of current used by all of the lamps. After current passes through the Ammeter some will go up through L1, some will go up through L2, and some will go up through L3. Kirchhoff's law says that as the current recombines after the lamps it will equal the current before it was split up. Or… The sum of the currents through L1, L2, and L3 will equal the total current used by the circuit. *Remember* - In parallel circuits, the voltage stays the same while the current is different through each device in the circuit.

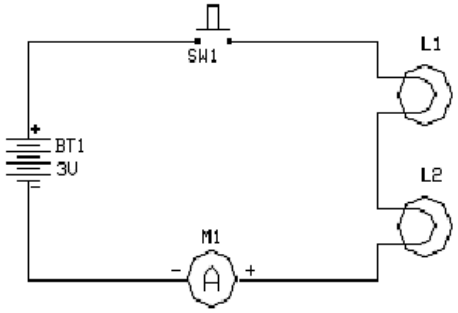

Series Lamp Circuit - In this circuit the current has only one path from the negative terminal of the battery to the positive terminal. Therefore, current does not change in the circuit. The voltage is divided between the two lamps. If the lamps have the same resistance each will drop the same voltage. In this case, L1 will drop 1.5vdc and L2 will drop 1.5vdc. Kirchhoff's law says that the voltage drops across each of the components in a circuit have to add up to the voltage applied to the circuit.

Resistance Formulas

Now it's time to apply formulas to circuits. Don't get scared. I'm going to use schematic drawings to demonstrate some resistance formulas. Schematics are electrical drawings of circuits. Each symbol in a schematic represents a specific device that's used to build real electronic circuits. Since this is an introduction to electronics, I'll keep them relatively simple to start with. They'll get more complex as we go along

Resistances in Series

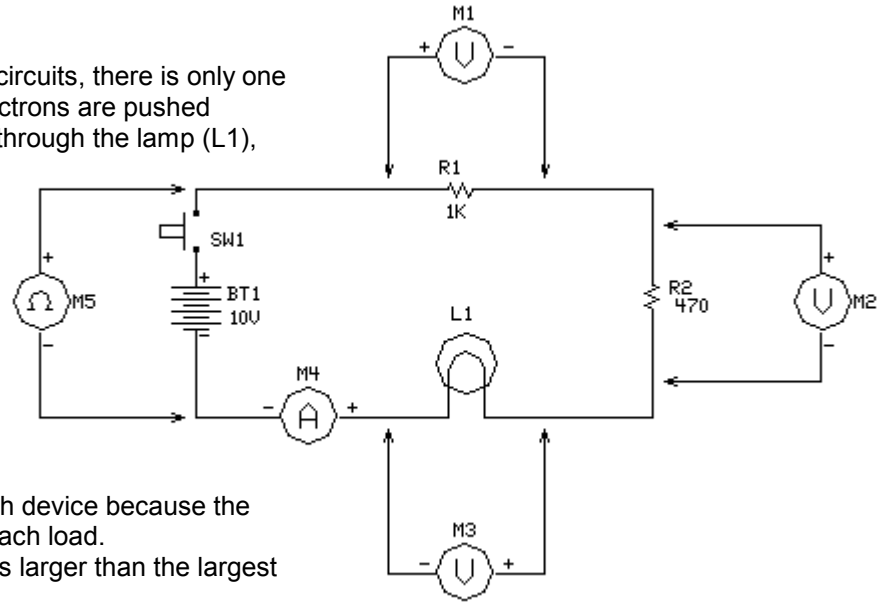

This is a series circuit. In series circuits, there is only one path for electricity to flow. As electrons are pushed through this circuit they will flow through the lamp (L1), resistor (R1), and resistor (R2). Of course switch SW1 has to be closed before any current will flow. The meters will read Voltage (V), Current (A), and Resistance (Ω).

In a series circuit:

1. Current stays the same because it doesn't split into separate branches.
2. Voltage changes across each device because the voltage is divided between each load.
3. The total resistance is always larger than the largest resistance in the circuit.

To find to total resistance of this circuit you would apply the series resistance formula:

$$R_T = R_1 + R_2 + R_3 ...$$

Total resistance would equal the sum of all the resistances in the circuit. Assuming that L1 has a resistance of 40Ω.

The formula to solve for total resistance in this circuit:

$$R_T = 1000 + 470 + 40$$
$$R_T = 1510\Omega$$

Resistance in Parallel

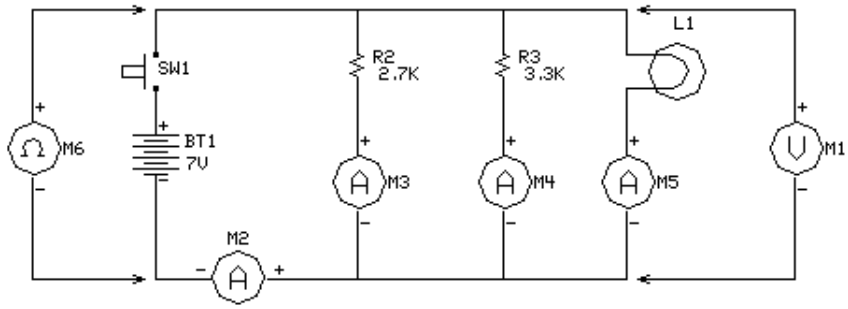

This is a parallel circuit. In parallel circuits, there is more than one path for electricity to flow. As electrons are pushed through this circuit they will split up and flow through the lamp (L1), resistor (R2), and resistor (R3). Of course switch SW1 has to be closed before any current will flow. The meters will read Voltage (V), Current (A), and Resistance (Ω).

In a parallel circuit:

1. Voltage stays the same because each device is connected directly to the power source.
2. Current changes through each device depending on its resistance.
3. The total resistance is always smaller than the smallest resistance in the circuit.

To find to total resistance of this circuit you would apply the general parallel resistance formula:

$$R_T = \frac{1}{\frac{1}{R_1} + \frac{1}{R_2} + \frac{1}{R_3} \ldots}$$

Total resistance would equal the reciprocal of the sum of the reciprocals of each elements resistance. Assuming that L1 has a resistance of 40Ω.

The formula to solve for total resistance in this circuit:

$$R_T = \frac{1}{\frac{1}{40} + \frac{1}{2700} + \frac{1}{3300} \ldots}$$

$$R_T = 38.95\Omega$$

Circuit Analysis

This stuff is going to fry your brain so try to pay close attention. We're going try to tie all these laws and formulas together to make them useful.

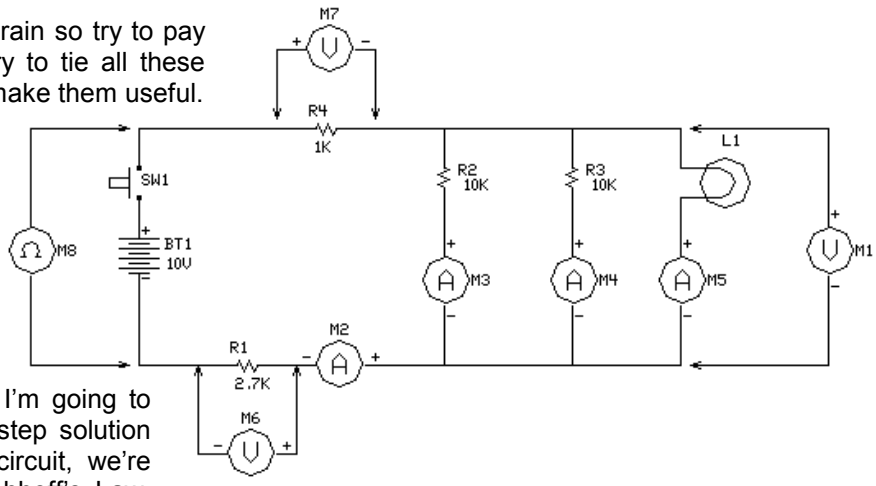

You probably noticed that the circuit here isn't a series circuit nor is it a parallel circuit. Rather, it has some elements of both. R4 and R1 are series resistors while R2, R3, and L1 are in parallel. That's why it's called a series-parallel circuit. I'm going to walk you through the step-by-step solution to this circuit. To analyze a circuit, we're going to use Ohm's Law, Kirchhoff's Law, and the resistance formulas to solve for the voltage, current, and resistance of each device in the entire circuit. It's a systematic approach that works every time. Be sure to use it when completing your exercises.

Step 1. Create a table listing each device for the rows, as well as Voltage, Current, Resistance, and Power for the columns. Add a row on the bottom for totals.

Step 2. Fill in the table with the information you can gather from the schematic. Convert all values to units. For this exercise, assume the lamp has a resistance of 300Ω.

Device	E	I	R	P
R1			**2700 Ω**	
R2			**10000Ω**	
R3			**10000Ω**	
R4			**1000Ω**	
L1			**300Ω**	
Totals	**10vdc**			

Note - Constantly look for opportunities to apply Ohm's Law, Kirchhoff's Law, or the resistance formulas. Right now, you would think we could add the resistances to get the total resistance, ***but we can't****. If this were a series circuit we could. However, this is a series-parallel circuit. We need to solve the parallel resistance first.*

Step 3. Identify which components make up the parallel branch of the circuit. For this circuit it R2, R3, and L1. Calculate the total resistance of these resistances using the parallel resistance formula.

$$R_T = \frac{1}{\frac{1}{R_2} + \frac{1}{R_3} + \frac{1}{L_1}} \text{ or } R_T = \frac{1}{\frac{1}{10000} + \frac{1}{10000} + \frac{1}{300}} \text{ or } R_T = 283\Omega$$

Always check to make sure your result is smaller than the smallest resistance in the formula.

Step 4. Add the total resistance of the parallel branch to the series resistors in the circuit using the series resistance formula.

$R_T = R_1 + R_P + R_4$ or $R_T = 2700 + 283 + 1000$ or $R_T = 3983\Omega$

Add this value to the table under total resistance.

Step 5. Can we apply Ohm's Law now? Sure we can. We have E and R for Totals. That means we have two terms of the equation and anytime we have two terms, we can find the third. Applying Ohm's Law –

$I = E/R$ we get $I = 10/3983$ or $I = .0025 Amps$

$P = I \bullet E$ we get $P = .026 \bullet 10$ or $P = .26 Watts$

Add these calculations to the table.

Note *- Are you ready for an avalanche of results? We're almost at a breaking point for some real fast action here. Before we can go any farther we have to remember Kirchhoff's Law. It states in a round about way that current remains constant in a series circuit and changes in a parallel circuit.*

Step 6. Identify the series resistances in the circuit. Since R1 and R4 are series resistances, then they must have the same current flowing through them – That's the Law! Since current remains constant in a series circuit, then the current flowing through these resistors must be the same as the total current – That's also the Law! All we need to do is copy the total current to the currents flowing through the series resistors R1 and R4. Update the table with these values.

Device	E	I	R	P
R1	**6.75V**	**.0025A**	2700 Ω	**.017W**
R2			10000Ω	
R3			10000Ω	
R4	**2.5V**	**.0025A**	1000Ω	**.006W**
L1			300Ω	
Totals	10vdc	**.0025A**	**3983Ω**	**.26W**

Step 7. It's Ohm's Law time again. Apply Ohm's Law to determine the voltage across R1 and R4.

R1. $E = I \bullet R_1$ or $E = .0025 \bullet 2700$ or $E = 6.75 Volts$

R4. $E = I \bullet R_4$ or $E = .0025 \bullet 1000$ or $E = 2.5 Volts$

Now for calculating the Power

R1. $P = I \bullet E$ or $P = .0025 \bullet 6.75$ or $P = .017 Watts$

R4. $P = I \bullet E$ or $P = .0025 \bullet 2.5$ or $P = .006 Watts$

Fill in the table with these values.

Voltage Drop: *This is a common term used by electronic technicians to describe the amount of voltage found across a device in a circuit. Sometimes it's called IR drop because it's calculated using Ohm's Law E=IR. Anytime you place a load in an electrical circuit there will be measurable voltage drop across the device.*

Note *- How are you doing so far? There's just a few more things we have to do to completely solve this puzzle. Do you remember which components in this circuit were the parallel devices? If you think it's R2, R3 and L1… You're Right. Now… Do you remember the rules as far as parallel circuits are concerned? That's Right! Voltage stays the same while current changes through each load. If there was a way to determine the voltage across the parallel circuit, we'd know the voltage drops for R2, R3, and L1.*

Step 8. Kichhoff's 2nd Law states that the sum of the voltage drops has to equal the applied voltage. We can calculate the voltage drop across the parallel portion of this circuit but manipulating the formula a little bit.

$$E_T = IR_1 + IR_P + IR_4 \text{ or } E_P = E_T - (IR_1 + IR_4) \text{ or } E_P = 10 - (6.75 + 2.5) \text{ or } E_P = .75V$$

That means that the voltage drop across R2, R3, and L1 is .75V. Be sure to record these values in the table.

Step 9. Looking at the table, it's easy to see that Ohm's Law will finish up the entire circuit analysis. We'll run down through the table completing the calculations for Current and Power for R2, R3, and L1.

Device	E	I	R	P
R1	6.75V	.0025A	2700 Ω	.017W
R2	**.75V**	**.000075A**	10000Ω	**.000056W**
R3	**.75V**	**.000075A**	10000Ω	**.000056W**
R4	2.5V	.0025A	1000Ω	.006W
L1	**.75V**	**.0025A**	300Ω	**.001875W**
Totals	10vdc	.0025A	3983Ω	.26W

Current:

R2. $I = E/R_2$ or $I = .75/10000$ or $I = .000075 Amps$

R3. $I = E/R_3$ or $I = .75/10000$ or $I = .000075 Amps$

L1. $I = E/R_{L1}$ or $I = .75/300$ or $I = .0025 Amps$

Power:

R2. $P = I \bullet E$ or $P = .000075 \bullet .75$ or $P = .000056 Watts$

R3. $P = I \bullet E$ or $P = .000075 \bullet .75$ or $P = .000056 Watts$

L1. $P = I \bullet E$ or $P = .0025 \bullet .75$ or $P = .001875 Watts$

So… That's it! The circuit is completely analyzed. Go ahead and fill out the table.

Engineering Notation

Today, computer memory is measured in megabits, processor speed in gigahertz, and transmission rates in nanoseconds. You might purchase 60 gigabit hard disk or drive 120 kilometers to get to a job site. Electronics deals with some pretty big as well as pretty small numbers. Just look at the previous lesson on circuit analysis.

10000 Ohms .000056 Watts .000075 Amps

That's way too many zeros to keep track of. Most problems that occur when analyzing circuits are due to a forgotten decimal place or an extra zero. Although engineering notation and the scientific calculator has made it much easier to perform this kind of math, you need to know is the common language technician's use when talking about numbers.

Standard Notation	Engineering Notation	Unit Of Measure	Symbol
1,000,000,000	1×10^9	Giga	G
1,000,000	1×10^6	Mega	M
1,000	1×10^3	Kilo	K
0	1×10^0 Or 1	Units	
.001	1×10^{-3}	mili	m
.000001	1×10^{-6}	micro	µ
.000000001	1×10^{-9}	nano	n
.000000000001	1×10^{-12}	pico (micro-micro)	p

When we did the calculations in the previous lesson, we had to convert all quantities to their units form. However, when the quantities are printed on a schematic they're in a form that takes advantage of engineering notation. 100000 Ohms becomes 100KΩ when it's represented on a schematic and 1KΩ becomes 1000 Ohms when we need to use it in a calculation. In engineering notation, the exponent is always in multiples of 3. Each multiple of 3 moves the decimal point to the left 3 places if the exponent is negative and to the right 3 places if exponent is positive. Each multiple of 3 represents a different short-hand expression or symbol to represent the number.

Examples:

100 microseconds (μS)	is equal to	100×10^{-6}	or	.0001 Seconds
10 kilo ohms (KΩ)	is equal to	10×10^{3}	or	10,000 Ohms
.000075A	is equal to	750×10^{-6}	or	750 microamperes (μA)
1,000,000 Hz	is equal to	1×10^{6}	or	1 Megahertz (MHz)

Resistor Color Code

The resistor color code is a code adopted by the Electronic Industries Association to mark the values of resistance on resistors is an easy to read manner. The code is comprised of a series of colored bands to indicate the Ohmic value of the resistor. The colored bands were adopted because printed numbers on the resistor bodies were too difficult to read.

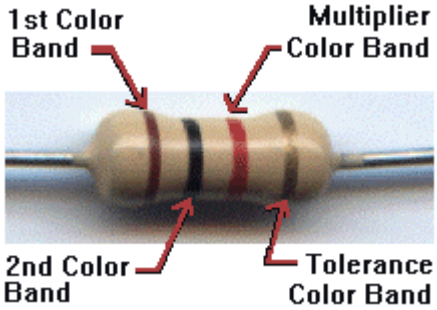

The first color represents the first significant figure of the resistor value. The second color represents the second figure, and the third color band represents the number of zeros following the first two figures. A fourth color band is sometimes added to indicate the tolerance or accuracy of the resistor.

The resistor shown here is a Brown, Black, Red resistor or 1000 Ohms (1KΩ).

0	Black	
1	Brown	
2	Red	
3	Orange	
4	Yellow	
5	Green	
6	Blue	
7	Violet	
8	Gray	
9	White	
5%	Gold	
10%	Silver	
20%	No Color	

The third color band indicates the number of zeros to be added after the figures given by the first two color bands. But if the third color band is gold, multiply by 0.1 and if silver, multiply by 0.01. Do not get confused by the fourth color band with indicates tolerance. Thus, a resistor marked blue-red-gold-gold has a resistance of 6.2 ohms and 5% tolerance.

Conclusion

Basic knowledge and application of electronic formulas is essential to any electronics technician. Ohm's Law, Kirchhoff's Law, and the series of resistance formulas will help you troubleshoot power supplies and computer control circuits. You'll also use engineering notation on a daily basis and will need to know the resistor color code to perform your electronics experiments. Keep these formulas in your mental toolkit. You'll be using them again real soon.

Electronics Formulas

1. Ohm's Law Formulas For DC Circuits

Component	Unit			
Power	Watts	$P = I \bullet E$	$P = I^2 R$	$P = E^2/R$
Current	Amps	$I = E/R$	$I = P/E$	$I = \sqrt{P/R}$
Voltage	Volts	$E = I \bullet R$	$E = P/I$	$E = \sqrt{PR}$
Resistance	Ohms	$R = E/I$	$R = E^2/P$	$R = P/I^2$

2. Kirchhoff's Law

$$I_T = I_1 + I_2 + I_3 \ldots$$
$$E_T = IR_1 + IR_2 + IR_3 \ldots$$

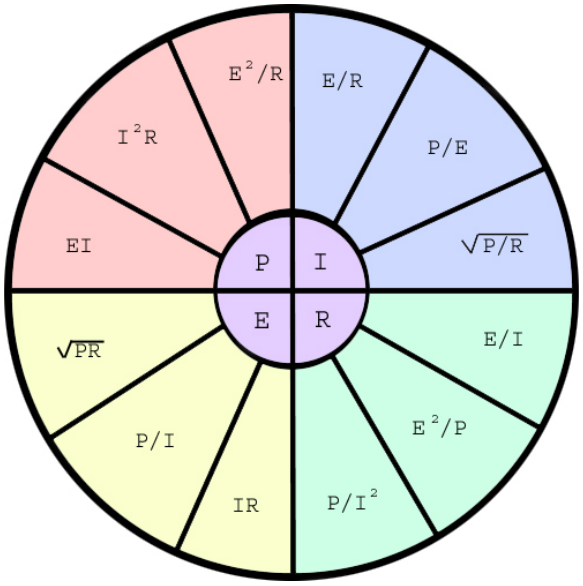

3. Resistors In Series

$$R_T = R_1 + R_2 + R_3 \ldots$$

4. Two Resistors In Parallel

$$R_T = \frac{R_1 R_2}{R_1 + R_2}$$

5. Equal Resistors In Parallel

$$R_T = R/n$$

Where n = Number of Resistors in the Circuit

6. Resistors In Parallel
(General Formula – This works all of the time.)

$$R_T = \frac{1}{\frac{1}{R_1} + \frac{1}{R_2} + \frac{1}{R_3} \ldots}$$

Frank C. Pendzich © 8 July, 2002

7. Resistor Color Code

0	Black	
1	Brown	
2	Red	
3	Orange	
4	Yellow	
5	Green	
6	Blue	
7	Violet	
8	Gray	
9	White	
5%	Gold	
10%	Silver	
20%	No Color	

The third color band indicates the number of zeros to be added after the figures given by the first two color bands. But if the third color band is gold, multiply by 0.1 and if silver, multiply by 0.01. Do not get confused by the fourth color band with indicates tolerance. Thus, a resistor marked blue-red-gold-gold has a resistance of 6.2 ohms and 5% tolerance.

8. Engineering Notation

Standard Notation	Engineering Notation	Unit Of Measure	Symbol
1,000,000,000	1×10^{9}	Giga	G
1,000,000	1×10^{6}	Mega	M
1,000	1×10^{3}	Kilo	K
0	1×10^{0} Or 1	Units	
.001	1×10^{-3}	mili	m
.000001	1×10^{-6}	micro	µ
.000000001	1×10^{-9}	nano	n
.000000000001	1×10^{-12}	pico (micro-micro)	p

A Little History…

Georg Simon Ohm came from a Protestant family. His father, Johann Wolfgang Ohm, was a locksmith while his mother, Maria Elizabeth Beck, was the daughter of a tailor. Although his parents had not been formally educated, Ohm's father was a rather remarkable man who had educated himself to a high level and was able to give his sons an excellent education through his own teachings. Had Ohm's brothers and sisters all survived he would have been one of a large family but, as was common in those times, several of the children died in their childhood. Of the seven children born to Johann and Maria Ohm only three survived, Georg Simon, his brother Martin who went on to become a well-known mathematician, and his sister Elizabeth Barbara.

When they were children, Georg Simon and Martin were taught by their father who brought them to a high standard in mathematics, physics, chemistry and philosophy. This was in stark contrast to their school education. Georg Simon entered Erlangen Gymnasium at the age of eleven but there he received little in the way of scientific training. In fact this formal part of his schooling was uninspired stressing learning by rote and interpreting texts. This contrasted strongly with the inspired instruction that both Georg Simon and Martin received from their father who brought them to a level in mathematics which led the professor at the University of Erlangen, Karl Christian von Langsdorf, to compare them to the Bernoulli family. It is worth stressing again the remarkable achievement of Johann Wolfgang Ohm, an entirely self-taught man, to have been able to give his sons such a fine mathematical and scientific education.

In 1805 Ohm entered the University of Erlangen but he became rather carried away with student life. Rather than concentrate on his studies he spent much time dancing, ice skating and playing billiards. Ohm's father, angry that his son was wasting the educational opportunity that he himself had never been fortunate enough to experience, demanded that Ohm leave the university after three semesters. Ohm went (or more accurately, was sent) to Switzerland where, in September 1806, he took up a post as a mathematics teacher in a school in Gottstadt bei Nydau.

Karl Christian von Langsdorf left the University of Erlangen in early 1809 to take up a post in the University of Heidelberg and Ohm would have liked to have gone with him to Heidelberg to restart his mathematical studies. Langsdorf, however, advised Ohm to continue with his studies of mathematics on his own, advising Ohm to read the works of Euler, Laplace and Lacroix. Rather reluctantly Ohm took his advice but he left his teaching post in Gottstadt bei Nydau in March 1809 to become a private tutor in Neuchâtel. For two years he carried out his duties as a tutor while he followed Langsdorf's advice and continued his private study of mathematics. Then in April 1811 he returned to the University of Erlangen.
His private studies had stood him in good stead for he received a doctorate from Erlangen on 25 October 1811 and immediately joined the staff as a mathematics lecturer. After three semesters Ohm gave up his university post. He could not see how he could attain a better status at Erlangen as prospects there were poor while he essentially lived in poverty in the lecturing post. The Bavarian government offered him a post as a teacher of mathematics and physics at a poor quality school in Bamberg and he took up the post there in January 1813.

This was not the successful career envisaged by Ohm and he decided that he would have to show that he was worth much more than a teacher in a poor school. He worked on writing an elementary book on the teaching of geometry while remaining desperately unhappy in his job. After Ohm had endured the school for three years it was closed down in February 1816. The Bavarian government then sent him to an overcrowded school in Bamberg to help out with the mathematics teaching.
On 11 September 1817 Ohm received an offer of the post of teacher of mathematics and physics at the Jesuit Gymnasium of Cologne. This was a better school than any that Ohm had taught in previously and it

Frank C. Pendzich © 8 July, 2002

had a well equipped physics laboratory. As he had done for so much of his life, Ohm continued his private studies reading the texts of the leading French mathematicians Lagrange, Legendre, Laplace, Biot and Poisson. He moved on to reading the works of Fourier and Fresnel and he began his own experimental work in the school physics laboratory after he had learnt of Oersted's discovery of electromagnetism in 1820. At first his experiments were conducted for his own educational benefit as were the private studies he made of the works of the leading mathematicians.

The Jesuit Gymnasium of Cologne failed to continue to keep up the high standards that it had when Ohm began to work there so, by 1825, he decided that he would try again to attain the job he really wanted, namely a post in a university. Realising that the way into such a post would have to be through research publications, he changed his attitude towards the experimental work he was undertaking and began to systematically work towards the publication of his results [1]:-

Overburdened with students, finding little appreciation for his conscientious efforts, and realising that he would never marry, he turned to science both to prove himself to the world and to have something solid on which to base his petition for a position in a more stimulating environment.

In fact he had already convinced himself of the truth of what we call today "Ohm's law" namely the relationship that the current through most materials is directly proportional to the potential difference applied across the material. The result was not contained in Ohm's firsts paper published in 1825, however, for this paper examines the decrease in the electromagnetic force produced by a wire as the length of the wire increased. The paper deduced mathematical relationships based purely on the experimental evidence that Ohm had tabulated.

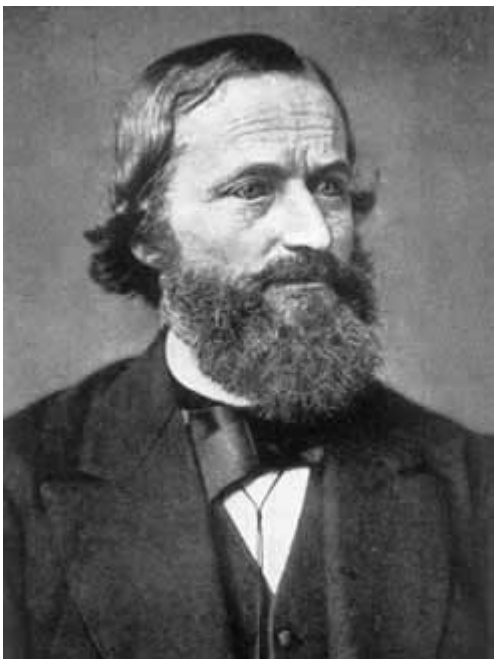

Gustav Kirchhoff's father was Friedrich Kirchhoff, a law councillor in Königsberg with a strong sense of duty to the Prussian state. Gustav's mother was Johanna Henriette Wittke. The family were part of the flourishing intellectual community in Königsberg and Gustav, the most able of Friedrich and Johanna's children, was brought up to think that service to Prussia was the only course open to him. University professors were civil servants in Prussia at this time and so to be a university professor, Gustav's parents believed, represented the right position where someone of high academic abilities could serve Prussia. Given Gustav's academic abilities at school, his future career followed naturally.

Kirchhoff was educated in Königsberg where he entered the Albertus University of Königsberg which had been founded in 1544 by Albert, the first duke of Prussia. Franz Neumann and Jacobi had jointly set up a mathematics-physics seminar at Königsberg in 1833, and they used it to introduce their students to methods of research. Kirchhoff attended the Neumann-Jacobi seminar from 1843 to 1846. Now 1843 was the year in which Jacobi became unwell, so it was Neumann who influenced Kirchhoff in a very positive way. Neumann's interests were at this time firmly in mathematical physics and, at the time Kirchhoff began to study at Königsberg, Neumann had become interested in electrical induction. In fact Neumann published the first of his two major papers on electrical induction in 1845 while Kirchhoff was studying with him. Kirchhoff was taught mathematics at the University of Königsberg by Friedrich Jules Richelot.

It was while he was studying with Neumann that Kirchhoff made his first outstanding research contribution which related to electrical currents. Kirchhoff's laws, which he announced in 1845, allowed calculation of currents, voltages and resistances in electrical circuits with multiple loops, extending the work of Ohm. Kirchhoff considered an electrical network consisting of circuits joined at nodes of the network and gave laws which reduce the calculation of the currents in each loop to the solution of algebraic equations. The first law states that the sum of the currents into a given node equals the sum of the currents out of that node. The second law states that the sum of electromotive forces in a loop in the network equals the sum of potential drops, or voltages across each of the resistances, in the loop.

Frank C. Pendzich © 8 July, 2002

Electronics Formulas

Exercise 1 – Ohm's Law

Name:	
Period:	
Date:	

Exercise Objective:

You will demonstrate your knowledge of Ohm's Law and your skills in using a scientific calculator by completing the table below.

Discussion of Fundamentals:

Ohm's Law – Shows that there is a specific and calculable relationship between the voltage, current, resistance, and power in a dc circuit. It states that the voltage (E) across any element in dc circuit is equal to the current passing through the element in amperes, multiplied by the element's resistance in ohms.

Mathematically expressed by: $E = I \bullet R$

Using algebraic transposition, the formulas for Current (I) and Resistance (R) are: $I = E/R$ and $R = E/I$

Another relation used in Ohm's Law is Power (P). The basic formula for calculating Power is: $P = I \bullet E$

Again… Using algebraic transposition, the formulas for Current and Voltage are: $I = P/E$ and $E = P/I$

Research Resources:

Company	Web Site	Description
NASA	http://www.grc.nasa.gov/WWW/K-12/Sample_Projects/Ohms_Law/ohmslaw.html	Tutorial, Ohm's Law
Idirect	http://webhome.idirect.com/~jadams/electronics/ohm.htm	Ohm's Law Explained
OhmsLaw	http://ohmslaw.com/	Ohm's Law Tutorial

Required Materials:

Formula Wheel
Scientific Calculator

Procedure:

Use Ohm's Law to complete the table below.

I	E	R	P
1A		100 Ohms	
	12VDC	2.2K Ohms	
.68A			75W
100mA	6.3VDC		
	3VDC		9mW
20mA		4.7K Ohm	
	9VDC	1K Ohm	
500mA			20mW
.07mA	6VDC		
	20VDC		1W

Frank C. Pendzich © 8 July, 2002

Electronics Formulas

Exercise 2 – Kirchhoff's Law

Name:	
Period:	
Date:	

Exercise Objective:

You will demonstrate your knowledge of Kirchhoff's 1st and 2nd Laws by solving for voltage and current values in two sample circuits.

Discussion of Fundamentals:

Kirchhoff's Laws – His 1st law states that the current flowing to a given point in a circuit is equal to the current flowing away from that point. The 2nd law states that the algebraic sum of the voltage drops in any closed circuit is equal to the applied voltage.

1st Law - $I_T = I_1 + I_2 + I_3 \ldots$

2nd Law - $E_T = IR_1 + IR_2 + IR_3 \ldots$

Research Resources:

Company	Web Site	Description
Physics Zone	http://www.sciencejoywagon.com/physicszone/lesson/07electr/kirchoff/	Tutorial and Lessons
RF Café	http://www.rfcafe.com/references/electrical/kirchhoffs_law.htm	Explanation of Laws

Required Materials:

Scientific Calculator

Procedure:

Apply Kirchhoff's Law to answer the following questions as they pertain to the circuits in Figure 1 and Figure 2.

1. What is the total current flowing through the circuit in Figure 1?

2. What is the voltage across the top resistor in Figure 2?

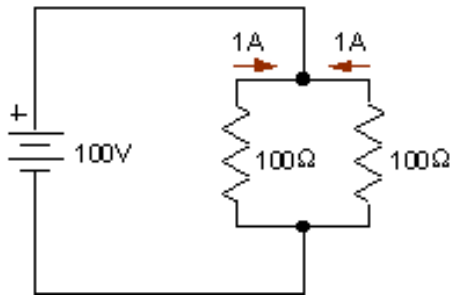

Figure 1. Parallel Circuit

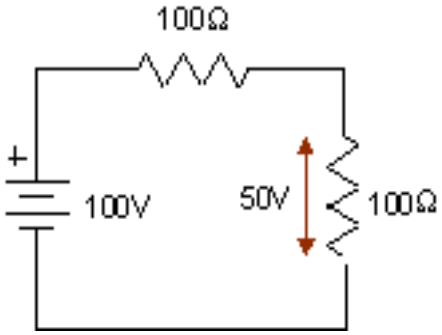

Figure 2. Series Circuit

Frank C. Pendzich © 8 July, 2002

Electronics Formulas

Exercise 3 – Resistance Circuits

Name:	
Period:	
Date:	

Exercise Objective:

Using Ohm's Law, Kirchhoff's Law, and the resistance formulas you will completely analyze both a serial and parallel circuit.

Discussion of Fundamentals:

Resistances in Series

This is a series circuit. In series circuits, there is only one path for electricity to flow. As electrons are pushed through this circuit they will flow through the lamp (L1), resistor (R1), and resistor (R2). Of course switch SW1 has to be closed before any current will flow. The meters will read Voltage (V), Current (A), and Resistance (Ω).

In a series circuit:

1. Current stays the same because it doesn't split into separate branches.
2. Voltage changes across each device because the voltage is divided between each load.
3. The total resistance is always larger than the largest resistance in the circuit.

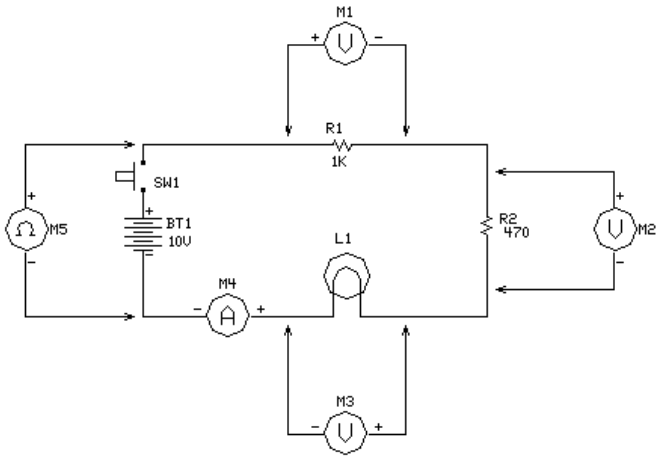

To find to total resistance of this circuit you would apply the series resistance formula:

$$R_T = R_1 + R_2 + R_3 \ldots$$

Research Resources:

Company	Web Site	Description
Cal Poly Pomona	http://www.csupomona.edu/~apfelzer/demos/resistor/ser-par/11-par.html	Circuit Tutorials
Pretice Hall	http://www.prenhall.com/tiponline/rankingtask/files/11DCCIRC/dcci178.pdf	Circuit Tutorials

Required Materials:

Formula Sheet
Scientific Calculator

Procedure:

1. Using Ohm's Law and the resistance formulas, complete this table from the circuit shown above.

DEVICE	I	E	R
R1			
R2			
L1	5.56mAdc		
TOTAL			

Frank C. Pendzich © 8 July, 2002

Resistance in Parallel

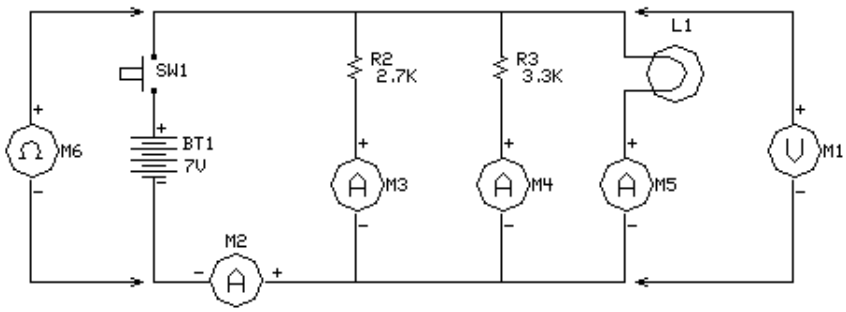

This is a parallel circuit. In parallel circuits, there is more than one path for electricity to flow. As electrons are pushed through this circuit they will split up and flow through the lamp (L1), resistor (R2), and resistor (R3). Of course switch SW1 has to be closed before any current will flow. The meters will read Voltage (V), Current (A), and Resistance (Ω).

In a parallel circuit:

1. Voltage stays the same because each device is connected directly to the power source.
2. Current changes through each device depending on its resistance.
3. The total resistance is always smaller than the smallest resistance in the circuit.

To find to total resistance of this circuit you would apply the general parallel resistance formula:

$$R_T = \frac{1}{\frac{1}{R_1} + \frac{1}{R_2} + \frac{1}{R_3} \ldots}$$

2. Using Ohm's Law and the resistance formulas, complete this table from the circuit shown above.

DEVICE	I	E	R
R2			
R3			
L1			25Ω
TOTAL			

Electronics Formulas

Exercise 4 – Engineering Notation

Name:	
Period:	
Date:	

Exercise Objective:

You will complete a table as you convert numbers between standard and engineering notation.

Discussion of Fundamentals:

Electronics deals with some pretty big as well as pretty small numbers. Most problems that occur when analyzing circuits are due to a forgotten decimal place or an extra zero. Although engineering notation and the scientific calculator has made it much easier to perform this kind of math, you need to know is the common language technician's use when talking about numbers.

Standard Notation	Engineering Notation	Unit Of Measure	Symbol
1,000,000,000	1×10^{9}	Giga	G
1,000,000	1×10^{6}	Mega	M
1,000	1×10^{3}	Kilo	K
0	1×10^{0} Or 1	Units	
.001	1×10^{-3}	mili	m
.000001	1×10^{-6}	micro	µ
.000000001	1×10^{-9}	nano	n
.000000000001	1×10^{-12}	pico (micro-micro)	p

Research Resources:

Company	Web Site	Description
Brazosport College	http://www.brazosport.cc.tx.us/~et/EngNot.htm	Tutorial and Exercise
Solutions for Education	http://www.sfe-dcs.com/NeatTricks/Sci&EngrNot.html	Tutorial and Exercise

Required Materials:

Engineering Notation Chart
Scientific Calculator

Procedure:

Complete the following table using the information presented on each line.

	Standard Notation	Engineering Notation	Unit of Measure
1.	1,200,000,000 Hertz	Hz	1.2 GHz
2.	Ohms	1×10^{3} Ohms	KΩ
3.	Seconds	1×10^{-6} Seconds	1 µS
4.	.001 micro farads	Farads	µF
5.	Ohms	Ohms	220 KΩ
6.	Volts	Volts	250mV
7.	128,000,000 Bytes	Bytes	MB
8.	Amps	15×10^{-3} Amps	mA
9.	120 miliamps	Amps	Amps
10.	Kilo Ohms	2.2×10^{6} Ohms	MΩ

Frank C. Pendzich © 8 July, 2002