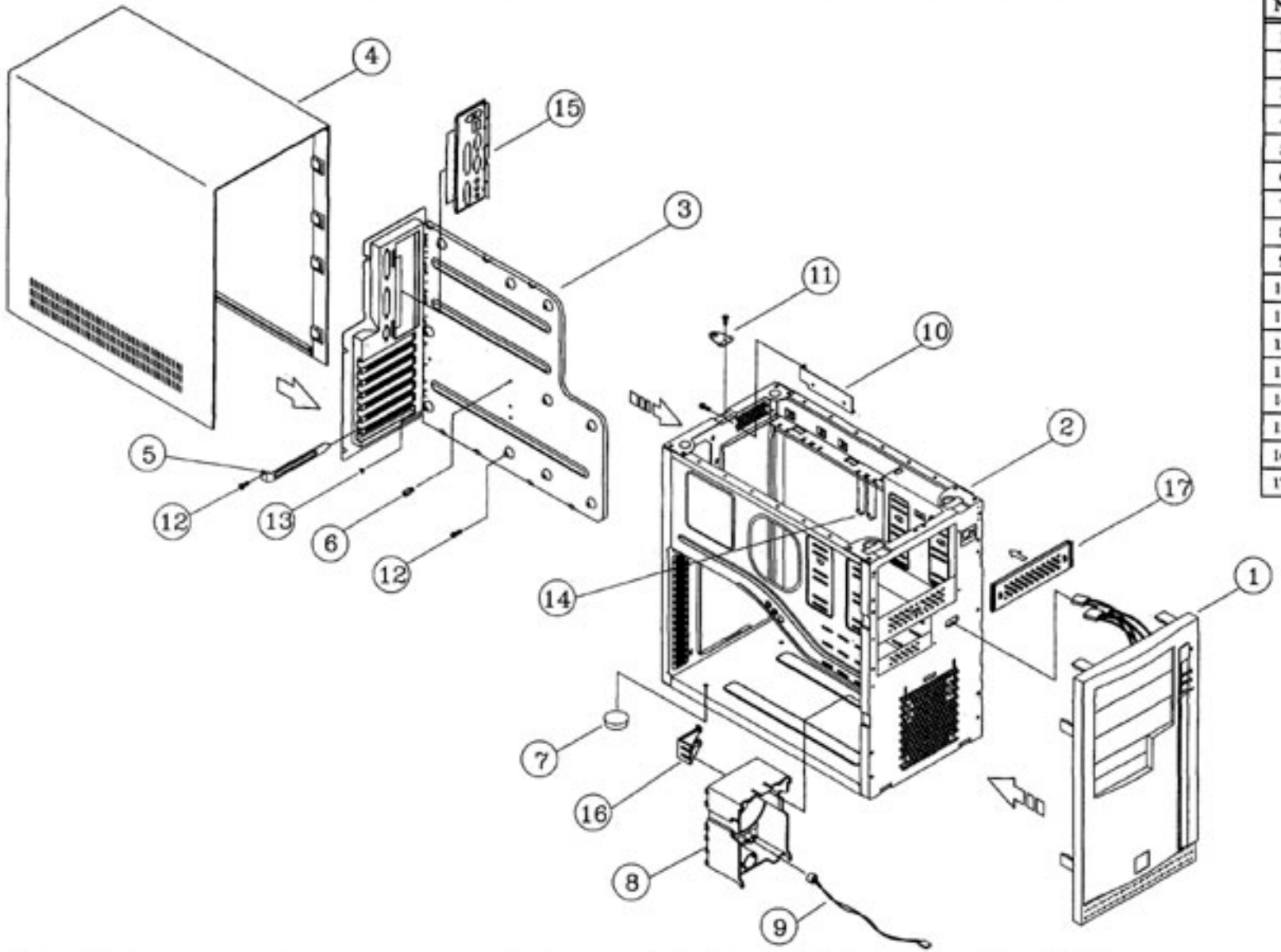

No.	Parts Description
1	FRONT PANEL
2	CHASSIS BASE
3	M/B MOUNTING DRAWER
4	COVER
5	I/O PANEL
6	GROUNDING COPPER SCREW
7	RUBBER FOOT
8	CARD GUIDE/FAN HOLDER
9	BUZZER
10	H.D.D. BRACKET
11	KEY FLAP
12	#6*32 SCREW
13	CANOE CLIP
14	GROUNDING CLIP
15	EMI I/O SHIELD
16	M.B. DRAWER RETAINER
17	5.25" METAL COVER

PARCEL LIST

Diagram	Parts Description	QTY	Diagram	Parts Description	QTY	Diagram	Parts Description	QTY	Diagram	Parts Description	QTY	Diagram	Parts Description	QTY
	GROUND COPPER SCREW	1		M3*5 SCREW	20		I/O PANEL	6		RUBBER FOOT	4		H.D.D. BRACKET	1
	#6*32 4.5SCREW	13		#6*32 SCREW	17		KEY FLAP	1		CANOE CLIP	1			

IW-A500-ATX